Centrimaster GT-1

Direct driven, single inlet centrifugal fans

Technical Data

FläktWoods

Contents

Direct-driven, Single-inlet Centrifugal Fans

The type GT CENTRIMASTER direct driven, single-inlet centrifugal fans cover air flows up to 7 m^3/s and pressure rises up to 2.000 Pa. The fan series consists of centrifugal fans available with two types of impeller:

- Impeller with forward-curved blades for the GTLF fans.
- Impeller with backward-curved blades for the GTLB fans.

Versions

Besides the normal version, the fans are also available in a spark-proof version. The smoke extraction version of GT has been tested by the French CTICM institute and by the Russian VNIIPO institute.
CTICM has tested the fans for +400 °C, 2 hours and the tests cover GTLB-1-025–071 as well as GTLF-1-031–050. VNIIPO has tested the fans for +400 °C, 2 hours and for +600 °C, 1 hour and the tests cover all single inlet GT-fans.

The fans in the spark-proof version conform to the provisions of German Standard VDMA 24 169 3.1 – 3.2 and 3.4.
The inlet cone is made of brass and in the GTLF fans the inlet is fitted with a brass band.

The single-inlet fans are rated for continuous operation at temperatures up to +80 °C if the inlet of the fan is connected to the ducting. If the motor is exposed to the air stream, i.e. on afree inlet fan, the ambient temperature must not exceed +40 °C. Motors for higher temperatures are available to special order.

General Survey Charts

GTLF-1-

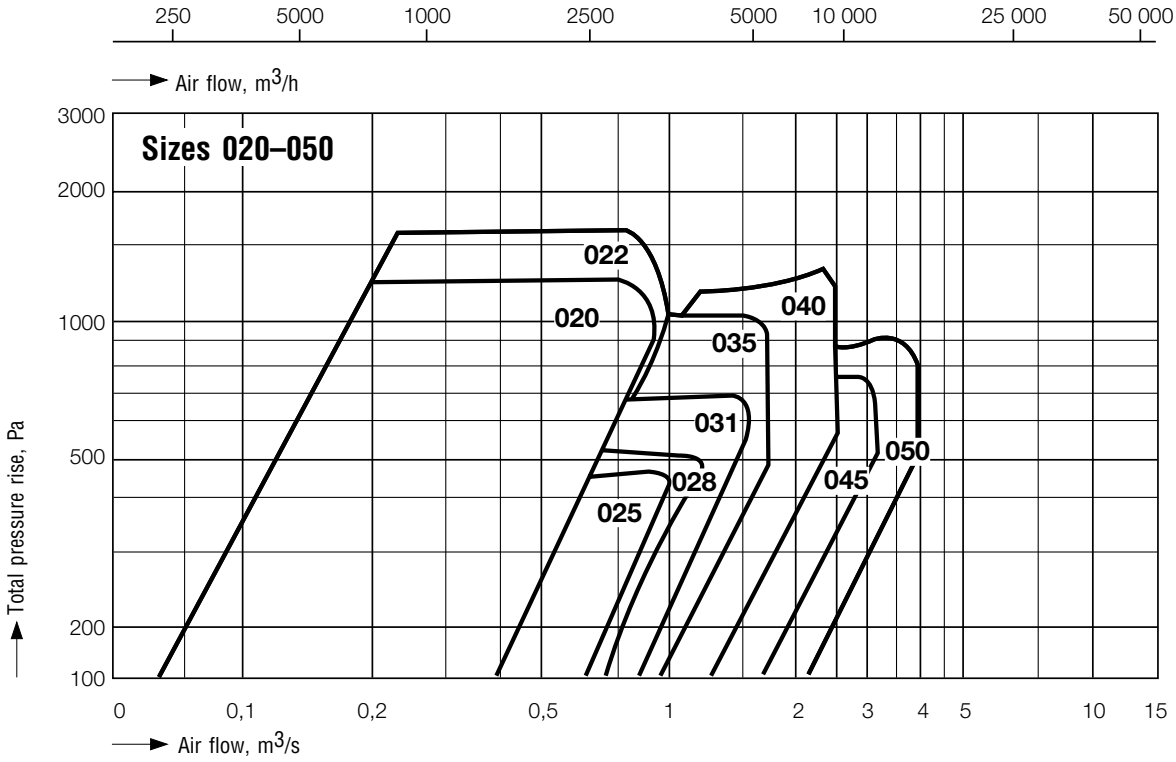

GTLB-1-

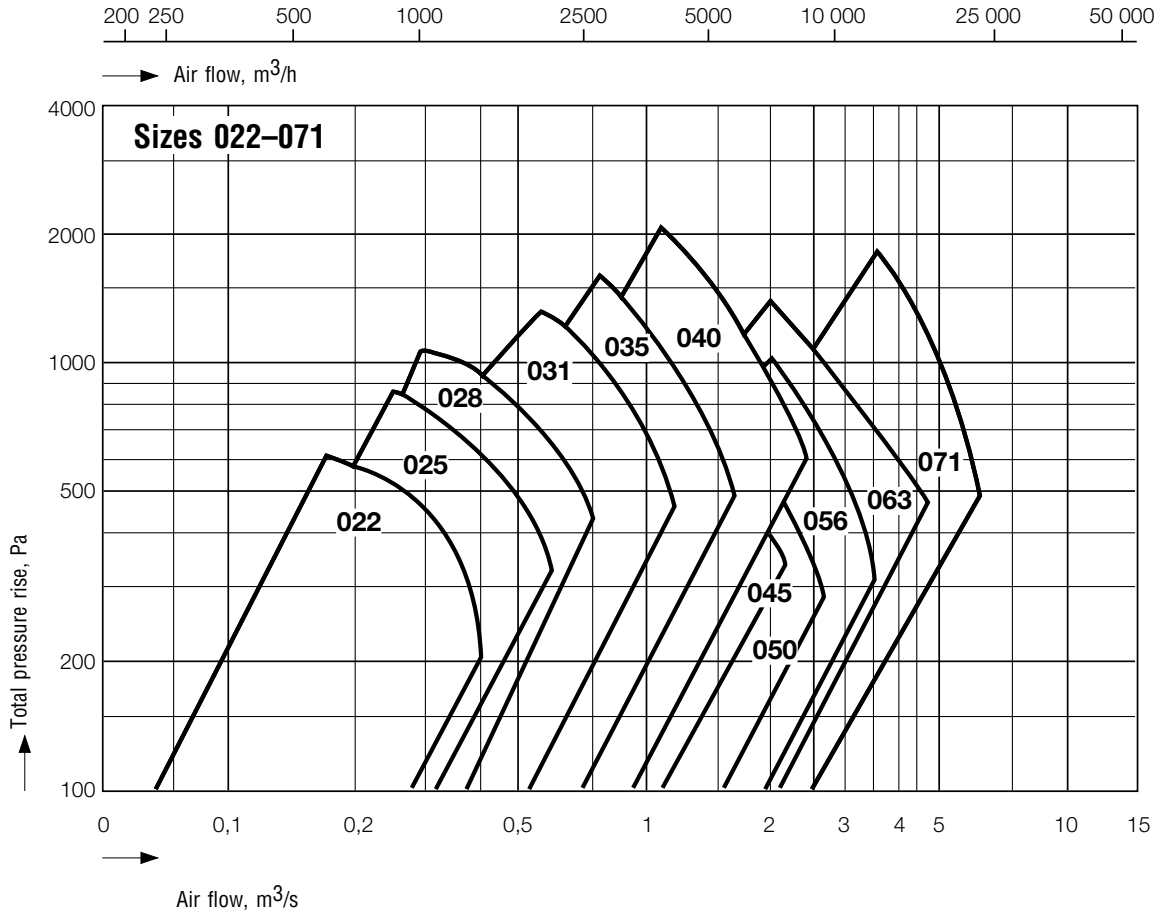

Design

Fan Casing

The fan casing is made of Sendzimir galvanised sheet steel. The casing side plates are stamped in one piece and the inlets are deep-pressed in the end walls. The fan casing is jointed by the "Pittsburg folding method" which produces tight, strong joints. This jointing method and the deep-pressed inlets guarantee a stable design and high, consistent quality. The fan tongue has been specially designed to offer optimised aerodynamic properties.

Pittsburg

Tongue of the GTLB fans.

Fan Inlet

The design of the fan inlet is of vital importance to high fan efficiency and a low level of sound generated by the fan. On the size GTLF fans, the inlet is directly deep-pressed into the end walls. On the GTLB fans the inlet must be deeper and must also extend into the impeller with a certain amount of overlap and a small, accurately predetermined radial gap.
The inlet cones of the GTLB fans are deep-drawn in one piece and are fitted to end walls of GTLF fans. This means that the GTLB fans have a "double inlet" that gives the fan casing additional rigidity.

Fan Impellers

The fan impellers with backward-curved blades (GTLB) are made of sheet steel and welded, coated with 60 mm thick epoxy powder, (colour: AM 8043, dark grey). The fan impellers with forward-curved blades (GTLF) are made of Sendzimir galvanised sheet steel. The impellers of the size 035–071 GTLB fans are dynamically balanced to an accuracy to ISO 1940–1973 G 2.5 at the maximum speed. The impeller of the size 022–031 GTLB fans and all sizes of GTLF fans are dynamically balanced to accuracy according to ISO Standard 1940–1973 G 6.3 at the maximum speed.

Fan impeller of the type GTLB fans

Fan impeller of the type GTLF fans

Materials and Finish, Motor – Tolerances and Quality

Materials and Finish

The GX fans in the standard version meet the provisions of Environmental Class M2.

Fan casing: Sendzimir galvanised sheet steel, (275 g/ m^2 thick zinc)

Inlet cone: Sendzimir galvanised sheet steel in the normal version. Brass in the spark-proof version.

Shaft: Centreless-ground steel with anti-corrosion protection.

Fan impeller: GTLB: Sheet steel, welded, coated with 60 mm epoxy powder and baked, colour: AM8043, dark grey.
GTLF: Sendzimir galvanised steel.

Tolerances

The particulars in the charts are given with the tolerance specified in the DIN 24 166 Standard, Class 2.

	Tolerance Class		
DIN 24166	1	2	3
Air flow qv:	±2.5%	±5.0%	±10.0%
Pressure rise, Δp_t:	±2.5%	±5.0%	±10,0%
Shaft power demand*, P:	+3.0%	+5.0%	+16.0%
Efficiency**, h:	–2.0%	–5.0%	–
A-weighted sound power level*, L_{WA}:	+3 dB	+4 dB	+6 dB

* Negative tolerance permissible

** Positive tolerance permissible

Motor

The GT fans are normally supplied with the motor mounted. This enables the fan to be trial run prior to dispatch and ABB can assume undivided warranty liability.

Detailed motor data is tabulated in separate tables. See under Motor Data.

ISO 9001 and ISO 14001 Quality

ABB Fans has received quality management certification in accordance with ISO 9001. We document our quality management responsibility at every stage of our business activities from the product development to production, procurement and marketing.
We have received environmental management certification in accordance with ISO 14001. We aim to minimise the impact of our business activities and our products on the environment.

Specification Text – GTLF

Single-inlet centrifugal fan for a direct-drive. The fan casing is made of Sendzimir galvanised sheet steel, jointed by the "Pittsburg folding method". Fan impeller with forward-curved blades, made of Sendzimir galvanised sheet steel. The fan impeller is dynamically balanced to accuracy according to ISO Standard 1940 – 1973 G 6.3.
The specified aerodynamic performance has been measured in accordance with AMCA 210-85 and 300-85.

– Normal version
– Smoke extraction version – can withstand 400 °C for 2 hours
– Spark-proof version

Fan details for the GTLF in accordance with DIN 24166, Class 2
The quality management system of the supplier has been granted ISO 9001 certification and his environmental management system has been granted ISO 14001 certification.

Air flow, q_v .....m^3/s
Total pressure rise, Δp_t.....Pa
Power demand, P.....kW
Min. fan efficiency, η .....%
Max. A-weighted total sound power level, L_{WA}...dB

Specification Text – GTLB

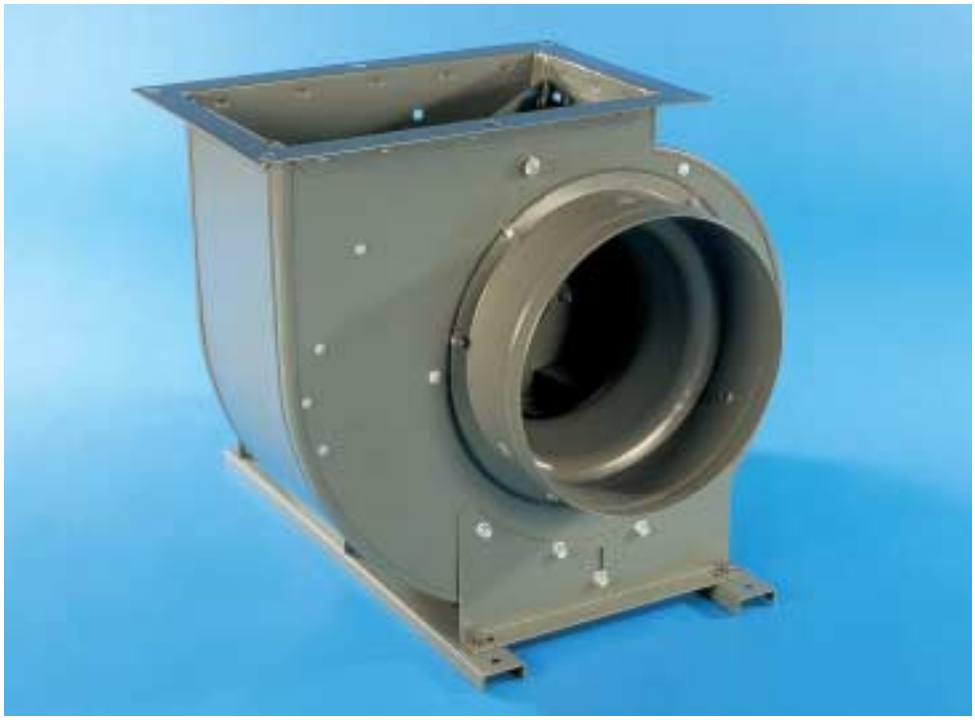

Single-inlet centrifugal fan for a direct-drive. The fan casing is made of Sendzimir galvanised sheet steel, jointed by the "Pittsburg folding method". Fan impeller with backward-curved blades, made of sheet steel, welded and coated with 60 mm thick epoxy powder. The fan impeller is dynamically balanced to accuracy according to ISO Standard 1940 – 1973 G 2.5 (sizes 035–071) or G 6.3 (sizes 022–031).

The specified aerodynamic performance has been measured in accordance with AMCA 210-85 and 300-85.

– Normal version
– Smoke extraction version – can withstand 400 °C for 2 hours
– Spark-proof version

Fan details for the GTLB in accordance with DIN 24166, Class 2
The quality management system of the supplier has been granted ISO 9001 certification and his environmental management system has been granted ISO 14001 certification.

Air flow, q_v.....m^3/s
Total pressure rise, Δp_t .....Pa
Power demand, P .....kW
Min. fan efficiency, η .....%
Max. A-weighted total sound power level, L_{WA}.....dB

Fan Charts – Explanation

The GT fan charts on the following pages are applicable to air with a density of 1.2 kg/m^3.

(1) = Air flow, m^3/s (x-axis)

(2) = Air flow, m^3/h (x-axis)

(3) = Total pressure rise, Pa (y-axis)

(4) = Fan efficiency η, %

(5) = Total sound power level L_{wA} (dB), broken line

(6) = Power demand, P (kW)

(7) = Moment of inertia, J (kg m^2)

(8) = Fan size

(9) = Dynamic pressure at the outlet, p_d

(10) = Connection loss at the inlet, Δp_1

(11) = Connection loss at the outlet, $\Delta p_2 + p_d$

(12) = Protective screen at the inlet, Δp_3

(13) = Protective screen at the outlet, Δp_4

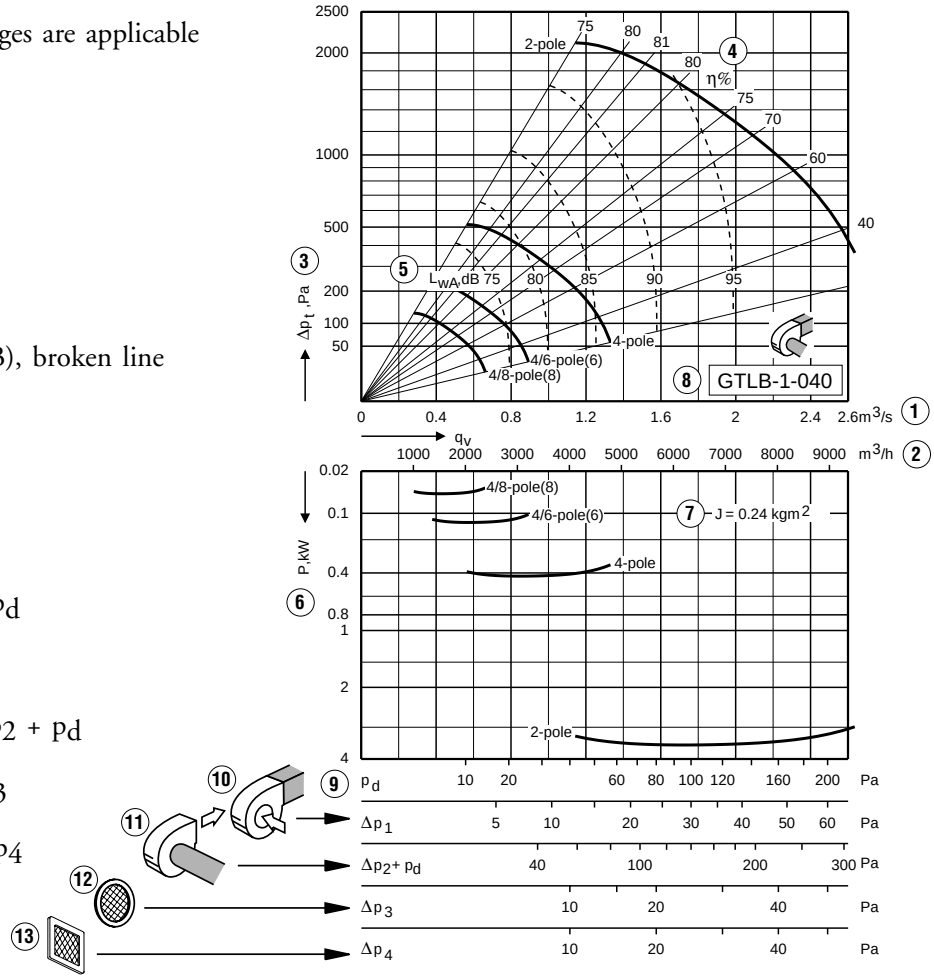

Acoustic Data – Explanation

Acoustic Data

A-weighted sound power levels L_{WA} on the outlet side of a fan with the inlet and outlet ducted are specified in the chart. Correction figures can be read from the adjacent table. The following formula is used for breaking down the sound each octave band and each sound path:

$$L_{Wokt(s)} = L_{WA} + K_{okt(s)}$$

Where K_{okt} can be obtained from the table. The following formula can be used for calculating the A-weighted sound power level on each sound path:

Sound path (s)	Speed range r/min	Correction K_{okt}, dB, Octave band, mid-frequency, Hz: 63	125	250	500	1 000	2 000	4 000	8 000	$L_{WA(s)} - L_{WA}$ dB	$L_{Wt(s)} - L_{WA(s)}$ dB
To outlet duct (1)	0 – 1928	1	-2	2	-5	-5	-8	-15	-18	0	6.3
	1929 – 3000	-1	-3	-7	-2	-5	-7	-12	-17	0	4.4
To inlet duct (2)	0 – 1928	2	0	-2	-3	-6	-9	-11	-11	-0.3	6.6
	1929 – 3000	-1	-4	-10	-2	-4	-6	-8	-15	1.1	3.3
Through the casing (3)	0 – 1928	-7	-9	-6	-10	-10	-14	-23	-33	-6.2	5.3
	1929 – 3000	-10	-13	-10	-9	-9	-15	-23	-36	-6.0	3.3
To fan outlet (open-discharge fan) (4)	0 – 1928	-11	-7	0	-6	-5	-8	-15	-18	-0.8	3.9
	1929 – 3000	-16	-8	-9	-3	-5	-7	-12	-17	-0.3	1.8

$$L_{WA(s)} = L_{WA} + [L_{WA(s)} - L_{WA}]$$

where the correction figure $L_{WA(s)} - L_{WA}$ can be obtained from the table.
The table also includes correction figures $L_{Wt(s)} - L_{WA(s)}$ that can be used for obtaining the total sound power level on each sound path:

$$L_{Wt(s)} = L_{WA(s)} + [L_{Wt(s)} - L_{WA(s)}]$$

Description of sound path	Test arrangement
1 = To outlet duct 2 = To inlet duct 3 = Through the casing	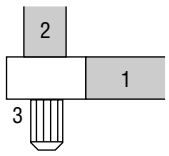
4 = To fan outlet (for open-discharge fan) 2 = To inlet duct 3 = Through the casing	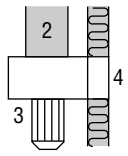

Symbols used

L_{WA}	A-weighted sound power level emitted to outlet duct	dB(A)
s	Sound path	-
$L_{WA(s)}$	A-weighted sound power level equivalent to sound path s	dB(A)
$L_{Wt(s)}$	Total sound power level (without frequency weighting A), (corresponding to sound path s)	dB
$L_{Wokt(s)}$	Total sound power level at each octave band (without frequency weighting A), (corresponding to sound path s)	dB
$K_{okt(s)}$	Correction figure for breaking down sound level at each octave band, (corresponding to sound path s)	dB
L	Distance	m
ΔL	Distance absorption (applicable to ideal conditions with hemispherical sound propagation)	dB
$L_{pA(s)}$	A-weighted sound power level at distance L from fan, (corresponding to sound path s)	dB(A)

Acoustic Data – Explanation

Distance absorption

The following formula is used to obtain the sound pressure level $L_{pA(s)}$ on free sound emission to the surroundings (sound paths 3 and 4) at various distances L:

$$L_{pA(s)} = L_{WA(s)} - \Delta L$$

where the distance absorption ΔL can be obtained from the table below:

L, m	1	3	5	10	15	20	25	30	40	50	75	100
ΔL, dB	8	17	22	28	31	34	36	37	40	42	45	48

Example:
GTLB-1-040: Air flow q_v = 1.6 m^3/s, total pressure rise Δp_t = 1800 Pa.

From fan chart: Speed n = 2871 r/min.
Power demand P = 3.56 kW.
Fan efficiency η = 80.9 %.
A-weighted sound power level to outlet duct L_{WA} = 94.6 dB(A).

If the fan has a ducted inlet and outlet, the sound level at each octave band and the total sound power level for each sound path will be the following:

Inlet duct: L_{W63Hz} = 94.6 – 1 = 93.6 dB
$L_{WA(2)}$ = 94.6 + 1.1 = 95.7 dB(A)
$L_{Wt(2)}$ = 95.7 + 3.3 = 99.0 dB

Sound path	63 Hz	125 Hz	250 Hz	500 Hz	1 kHz	2 kHz	4 kHz	8 kHz	L_{wA}, dB(A)	L_{wt}, dB
Outlet duct (s = 1)	93.6	91.6	87.6	92.6	89.6	87.6	82.6	77.6	94.6	99.0
Inlet duct (s = 2)	93.6	90.6	84.6	92.6	90.6	88.6	86.6	79.6	95.7	99.0
Surroundings – through the casing (the fan inlet and outlet ducted) (s = 3)	84.6	81.6	84.6	85.6	85.6	79.6	71.6	58.6	88.6	91.9

The A-weighted sound power level at a distance of one metre from the fan will be: $L_{pA(3)}$ = 88.6–8 = 80.6 dB(A)

If the fan has an open discharge, the A-weighted sound power level at the fan outlet will be:
$L_{wA(4)}$ = 94.6–0,3 = 94.3 dB(A).

The corresponding sound power level at a distance of 50 metres will be: $L_{pA(4)}$ = 94.3–42 = 52.3 dB(A).

Dimensions and Weights – Motor Data – GTLF-1-020

Dimensions and Weights

Right-hand version with 90° direction of discharge shown

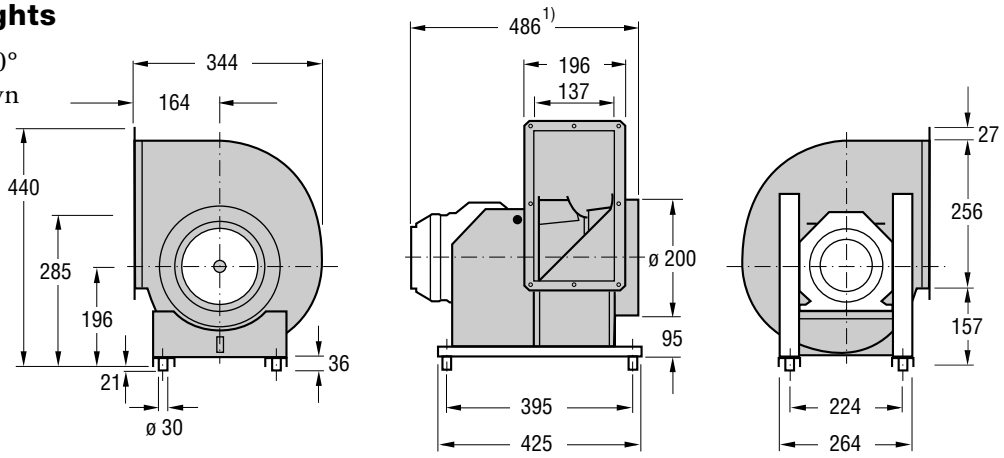

Right-hand version (viewed from drive side)

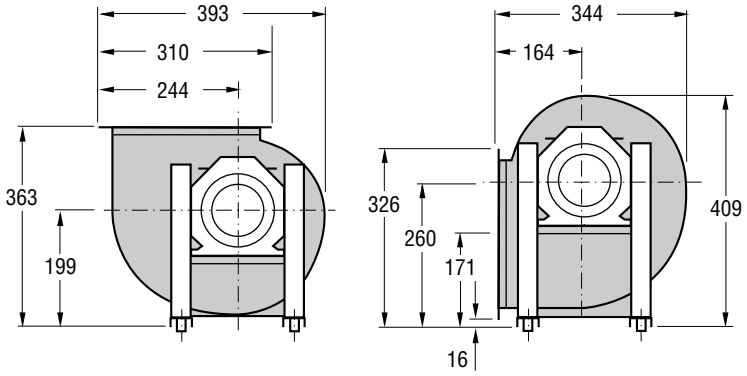

1) With max. motor size

Left-hand version (same dimensions as the right-hand version)

Weight (kg)

GTLF-1-020: 8.4

Outlet flange

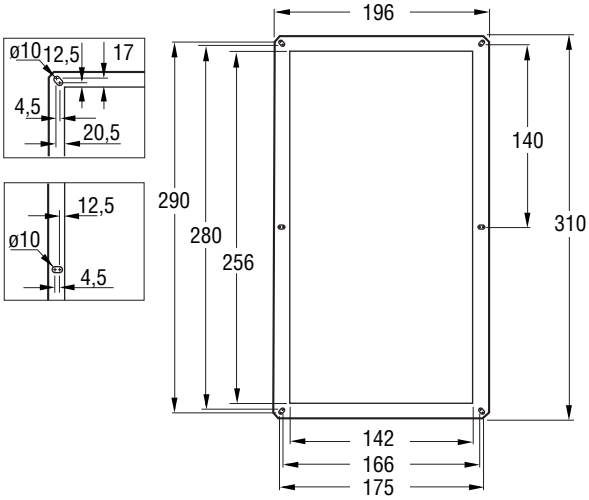

Motor data

Number of poles	Rated output kW	IEC Size	Motor code	Speed	Weight, kg	Hub code	Remark
4	0,37	71B	APAL-4-90037-c-d	1420	6,5	HULF-1-020-c-14-0	Motor code: c, d: see ordering codes page 59
2	2,2	90L	APAL-2-90220-c-d	2880	16,0	HULF-1-020-c-24-0	
4/6	0,45/0,15	80A	ATAL-4-90045-c-d	1390/945	8,5	HULF-1-020-c-19-0	Hub code: c = 1, right-hand version
4/8	0,55/0,11	80A	ARAL-4-90055-c-d	1410/690	8,5	HULF-1-020-c-19-0	c = 2, left-hand versionrande
2/4	2,2/0,45	90L	ARAL-2-90220-c-d	2860/1460	16,0	HULF-1-020-c-24-0	

Fan Charts – Acoustic Data – GTLF-1-020

Direct driven, single-inlet, forward-curved blades

Impeller diameter: 200 mm

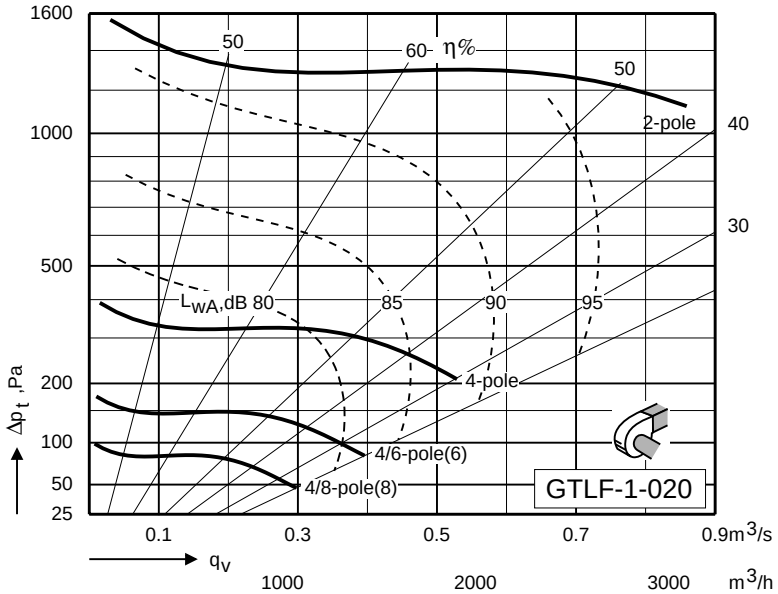

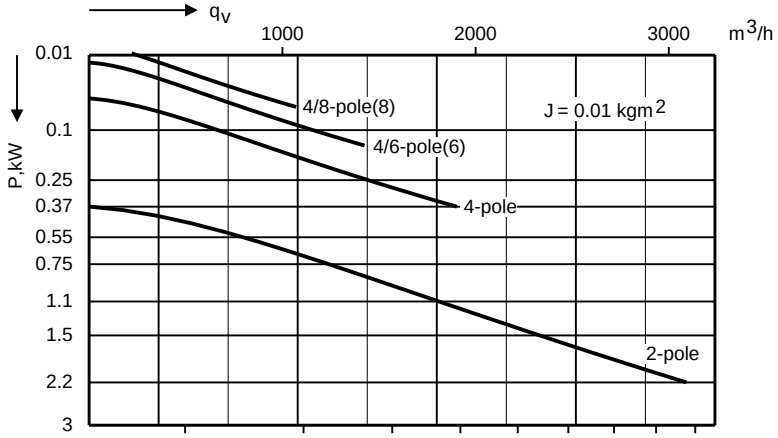

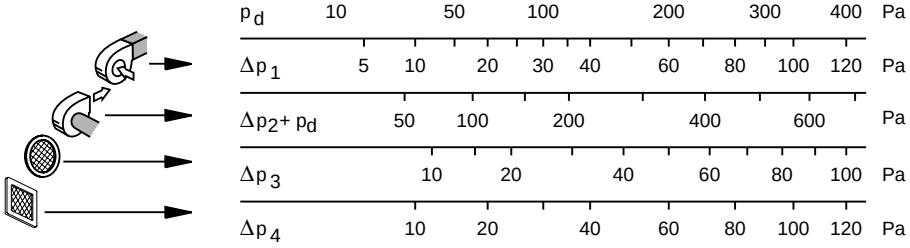

Acoustic Data

A-weighted sound power levels L_{WA} on the outlet side of a fan with the inlet and outlet ducted are specified in the chart. Correction figures can be read from the adjacent table. The following formula is used for breaking down the sound each octave band and each sound path:

$$L_{wokt(s)} = L_{WA} + K_{okt(s)}$$

where K_{okt} can be obtained from the table. The following formula can be used for calculating the A-weighted sound power level on each sound path:

$$L_{WA(s)} = L_{WA} + [L_{wA(s)} - L_{WA}]$$

where the correction figure $L_{wA(s)} - L_{wA}$ can be obtained from the table.
The table also includes correction figure $L_{wt(s)} - L_{wA(s)}$ that can be used for obtaining the total sound power level on each sound path:

$$L_{wt(s)} = L_{WA(s)} + [L_{wt(s)} - L_{WA(s)}]$$

Sound path (s)	Speed range r/min	Correction Kokt, dB Octave band, mid-frequency, Hz 63	125	250	500	1 000	2 000	4 000	8 000	$L_{WA(s)} - L_{WA}$ dB	$L_{Wt(s)} - L_{WA(s)}$ dB
To outlet duct (1)	0 – 1116	5	5	2	-4	-7	-9	-11	-12	0	9,4
	1117 – 2232	6	3	-1	-5	-6	-8	-9	-11	0	8,9
	2233 – 3000	5	1	-3	-4	-7	-7	-8	-10	0	7,7
To inlet duct (2)	0 – 1116	8	2	-4	-9	-8	-14	-15	-20	-3,7	13,1
	1117 – 2232	8	-1	-8	-11	-9	-11	-11	-15	-3,5	12,3
	2233 – 3000	6	1	-7	-10	-11	-9	-10	-13	-2,8	10,5
Through the casing (3)	0 – 1116	-7	-6	-4	-5	-7	-11	-18	-22	-2,7	4,4
	1117 – 2232	-7	-8	-8	-9	-8	-9	-17	-23	-3,6	3,4
	2233– 3000	-8	-8	-10	-9	-8	-6	-13	-19	-2	2,1
To fan outlet (open-discharge fan) (4)	0 – 1116	-17	-6	-3	-6	-7	-9	-11	-12	-1,5	3,2
	1117 – 2232	-19	-10	-6	-7	-6	-8	-9	-11	-0,9	1,6
	2233– 3000	-21	-13	-8	-6	-7	-7	-8	-10	-0,6	1,1

Dimensions and Weights – Motor Data – GTLF-1-022

Dimensions and Weights

Right-hand version with 90° direction of discharge shown

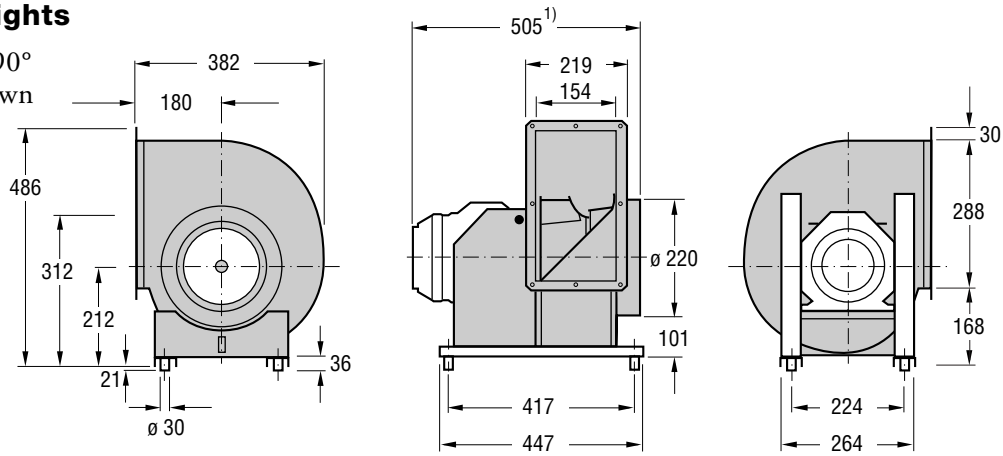

Right-hand version (viewed from drive side)

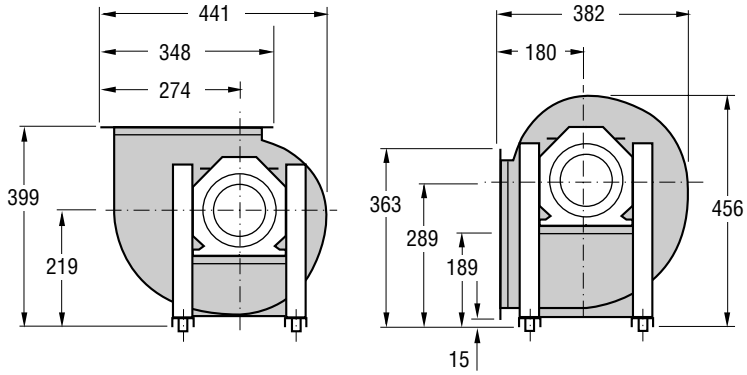

1) With max. motor size

Left-hand version (same dimensions as the right-hand version)

Weight (kg)

GTLF-1-022: 9,8

Outlet flange

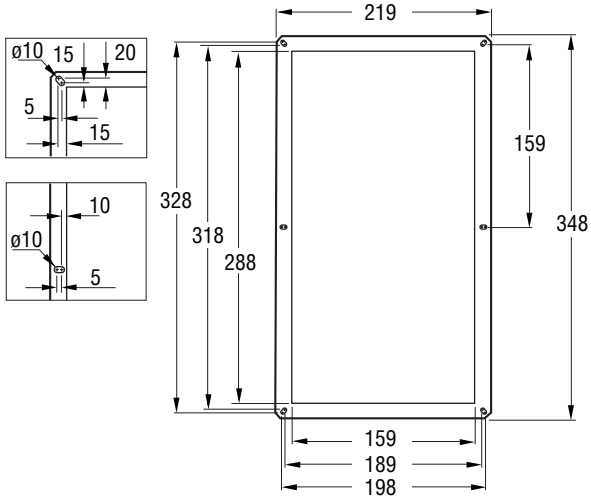

Motor data

Number of poles	Rated output kW	IEC Size	Motor code	Speed	Weight, kg	Hub code	Remark
4	0,55	80A	APAL-4-90055-c-d	1390	9,0	HULF-1-022-c-19-0	Motor code: c, d: see ordering codes page 59
2	2,2	90L	APAL-2-90220-c-d	2880	16,0	HULF-1-022-c-24-0	
4/6	0,75/0,22	80B	ATAL-4-90075-c-d	1400/955	10,5	HULF-1-022-c-19-0	Hub code: c = 1, right-hand version
4/8	0,55/0,11	80A	ARAL-4-90055-c-d	1410/690	9,0	HULF-1-022-c-19-0	c = 2, left-hand versionrande

Fan Charts – Acoustic Data – GTLF-1-022

Direct driven, single-inlet, forward-curved blades

Impeller diameter: 220 mm

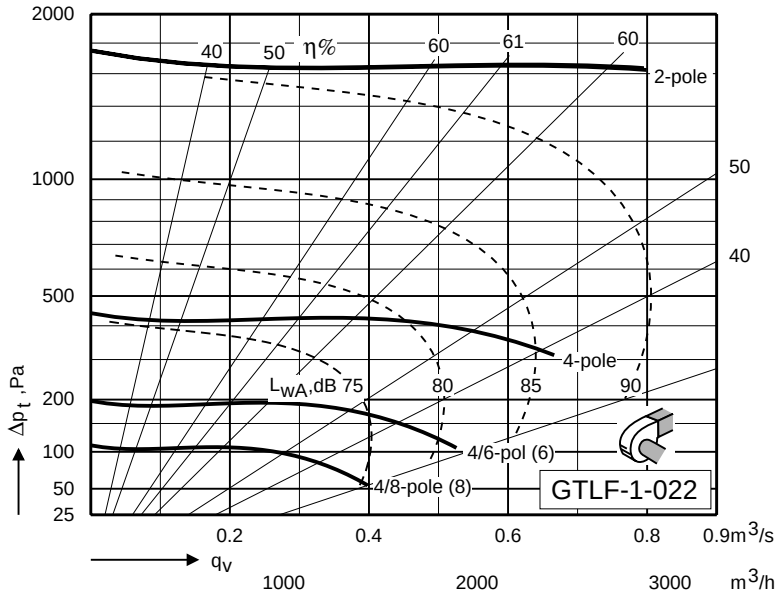

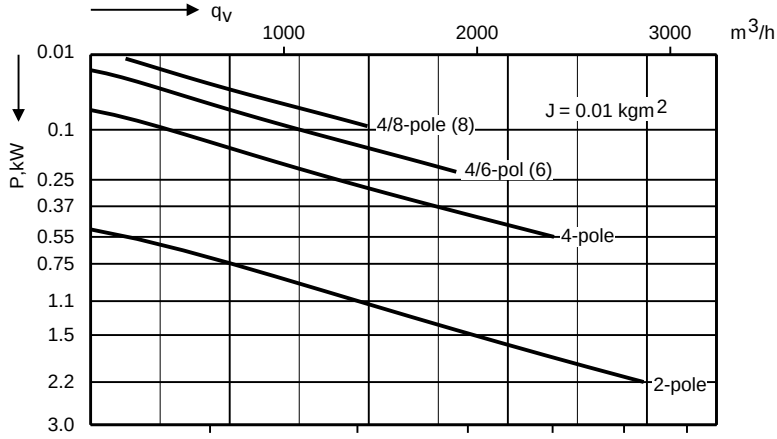

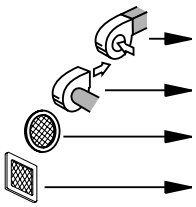

p_d	10	50	100	200	Pa					
Δp_1	5	10	20	30	40	60	80	Pa		
$\Delta p_2 + p_d$	50	100	200	400	Pa					
Δp_3	10	20	40	60	Pa					
Δp_4	10	20	40	60	80	Pa				

Acoustic Data

A-weighted sound power levels L_{WA} on the outlet side of a fan with the inlet and outlet ducted are specified in the chart. Correction figures can be read from the adjacent table. The following formula is used for breaking down the sound each octave band and each sound path:

$$L_{wokt(s)} = L_{WA} + K_{okt(s)}$$

where K_{okt} can be obtained from the table. The following formula can be used for calculating the A-weighted sound power level on each sound path:

$$L_{WA(s)} = L_{WA} + [L_{wA(s)} - L_{WA}]$$

where the correction figure $L_{wA(s)} - L_{wA}$ can be obtained from the table.
The table also includes correction figure $L_{wt(s)} - L_{wA(s)}$ that can be used for obtaining the total sound power level on each sound path:

$$L_{wt(s)} = L_{WA(s)} + [L_{wt(s)} - L_{WA(s)}]$$

Sound path (s)	Speed range r/min	Correction Kokt, dB, Octave band, mid-frequency, Hz 63	125	250	500	1 000	2 000	4 000	8 000	$L_{WA(s)} - L_{WA}$ dB	$L_{Wt(s)} - L_{WA(s)}$ dB
To outlet duct (1)	0 – 1060	5	5	2	-4	-7	-9	-10	-13	0	9,4
	1061 – 2121	5	4	-1	-6	-5	-8	-9	-12	0	8,6
	2122 – 3000	5	1	-3	-4	-7	-7	-8	-11	0	7,7
To inlet duct (2)	0 – 1060	8	1	-3	-8	-7	-12	-14	-20	-2,8	12,1
	1061 – 2121	8	-2	-9	-11	-7	-11	-9	-15	-2,4	11,2
	2122 – 3000	6	0	-7	-10	-10	-9	-9	-13	-2,5	10,0
Through the casing (3)	0 – 1060	-7	-6	-4	-5	-7	-11	-17	-23	-2,6	4,3
	1061 – 2121	-8	-7	-8	-10	-7	-9	-17	-24	-3,4	3,2
	2122 – 3000	-8	-8	-10	-9	-8	-6	-13	-20	-2	2,1
To fan outlet (open-discharge fan) (4)	0 – 1060	-16	-4	-3	-6	-7	-9	-10	-13	-1,4	3,6
	1061 – 2121	-18	-8	-6	-8	-5	-8	-9	-12	-0,8	1,8
	2122 – 3000	-19	-12	-8	-6	-7	-7	-8	-11	-0,7	1,2

Dimensions and Weights – Motor Data – GTLB-1-022

Dimensions and Weights

Right-hand version with 90° direction of discharge shown

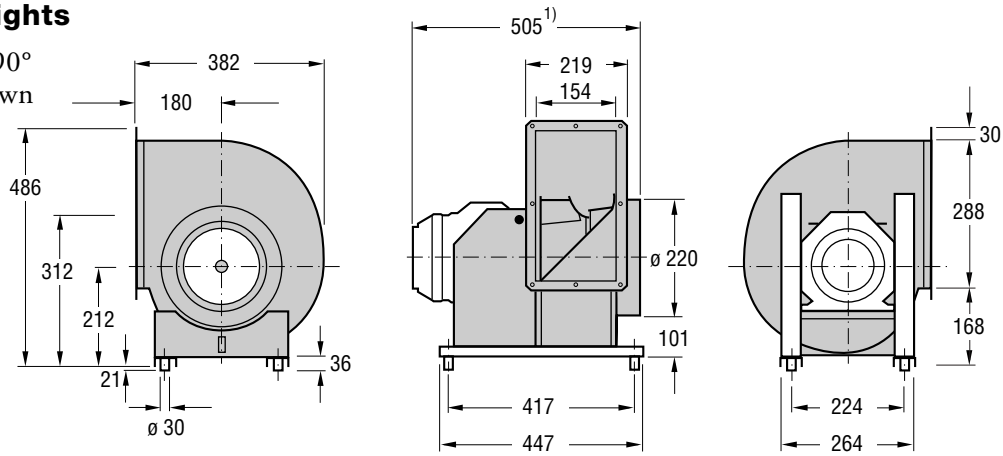

Right-hand version (viewed from drive side)

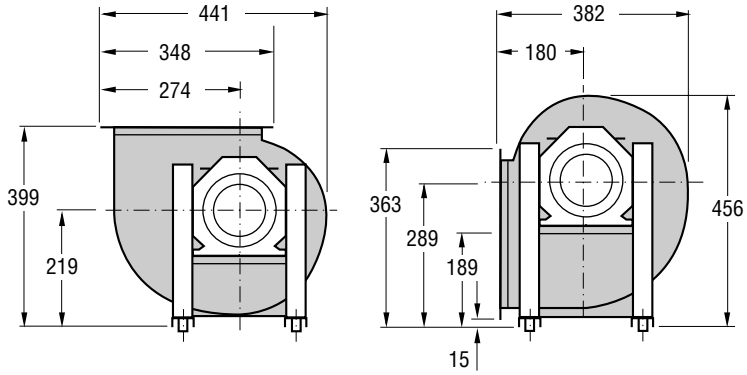

1) With max. motor size

Left-hand version (same dimensions as the right-hand version)

Weight (kg)

GTLB-1-022: 10,7

Outlet flange

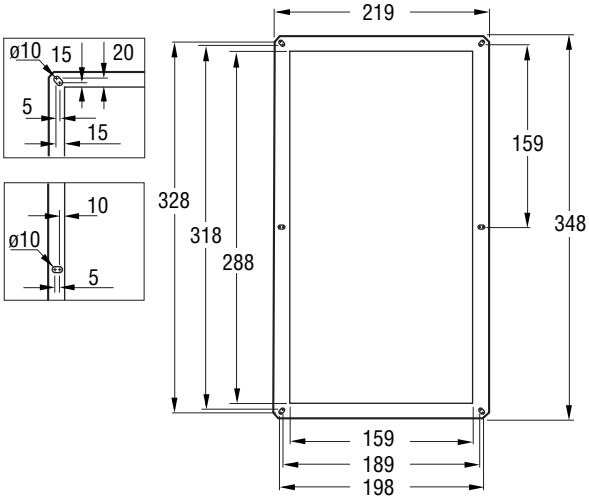

Motor data

Number of poles	Rated output kW	IEC Size	Motor code	Speed	Weight, kg	Hub code	Remark
4	0,25	71A	APAL-4-90025-c-d	1410	5,5	HULB-1-022-c-14-0	Motor code: c, d: see ordering codes page 59
2	0,37	71A	APAL-2-90037-c-d	2840	5,5	HULB-1-022-c-14-0	Hub code: c = 1, right-hand version
4/6	0,3/0,1	71B	ATAL-4-90030-c-d	1350/900	6,5	HULB-1-022-c-14-0	c = 2, left-hand versionrande
4/8	0,37/0,09	71B	ARAL-4-90037-c-d	1360/700	6,5	HULB-1-022-c-14-0	
2/4	0,55/0,12	71B	ARAL-2-90055-c-d	2700/1470	6,5	HULB-1-022-c-14-0	

Fan Charts – Acoustic Data – GTLB-1-022

Direct driven, single-inlet, backward-curved blades

Impeller diameter: 220 mm

Enbart GTLB finns i brandgas-utförande

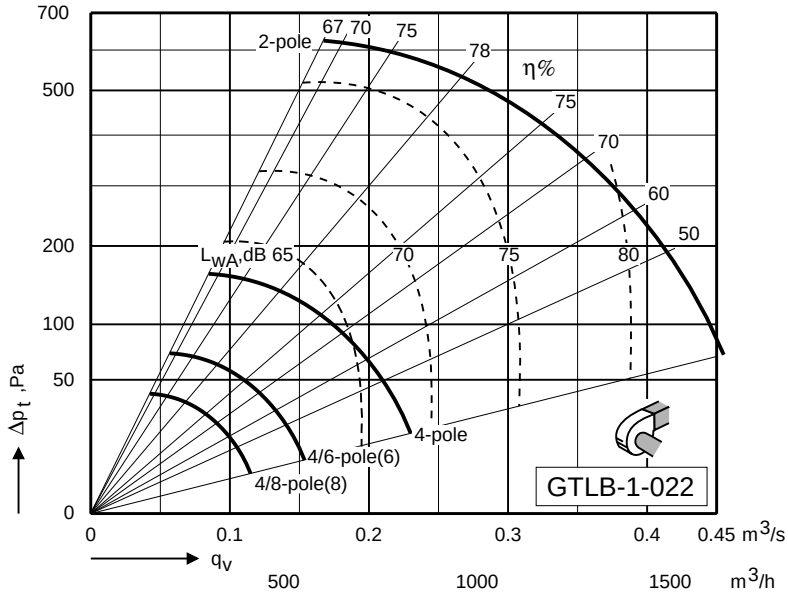

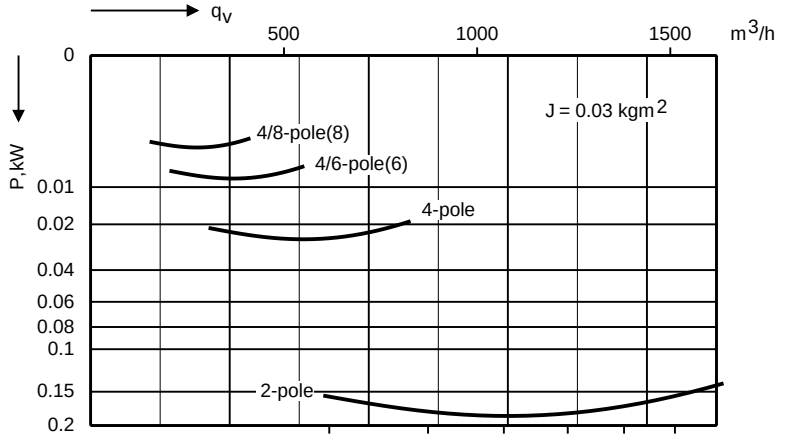

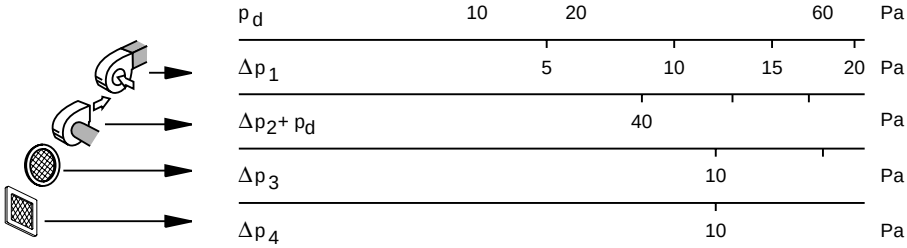

Acoustic Data

A-weighted sound power levels L_{WA} on the outlet side of a fan with the inlet and outlet ducted are specified in the chart. Correction figures can be read from the adjacent table. The following formula is used for breaking down the sound each octave band and each sound path:

$$L_{wokt(s)} = L_{WA} + K_{okt(s)}$$

where K_{okt} can be obtained from the table. The following formula can be used for calculating the A-weighted sound power level on each sound path:

$$L_{WA(s)} = L_{WA} + [L_{wA(s)} - L_{WA}]$$

where the correction figure $L_{wA(s)} - L_{wA}$ can be obtained from the table.
The table also includes correction figure $L_{wt(s)} - L_{wA(s)}$ that can be used for obtaining the total sound power level on each sound path:

$$L_{wt(s)} = L_{WA(s)} + [L_{wt(s)} - L_{WA(s)}]$$

Sound path (s)	Speed range r/min	Correction Kokt, dB Octave band, mid-frequency, Hz 63	125	250	500	1 000	2 000	4 000	8 000	$L_{WA(s)} - L_{WA}$ dB	$L_{Wt(s)} - L_{WA(s)}$ dB
To outlet duct (1)	0 – 1928	2	2	3	-4	-6	-9	-12	-16	0	7,8
	1929 – 3000	2	-1	-5	-1	-6	-8	-12	-16	0	5,9
To inlet duct (2)	0 – 1928	4	1	2	-4	-6	-9	-12	-16	-0,2	8,1
	1929 – 3000	1	-2	-6	0	-4	-9	-11	-16	0,9	4,9
Through the casing (3)	0 – 1928	-6	-5	-3	-9	-11	-15	-20	-31	-5,7	6,9
	1929 – 3000	-6	-8	-9	-7	-12	-15	-23	-35	-6,4	5,6
To fan outlet (open-discharge fan) (4)	0 – 1928	-15	-7	-2	-6	-6	-9	-12	-16	-1,4	3,4
	1929 – 3000	-19	-11	-10	-3	-6	-8	-12	-16	-0,9	1,7

Dimensions and Weights – Motor Data – GTLF-1-025

Dimensions and Weights

Right-hand version with 90° direction of discharge shown

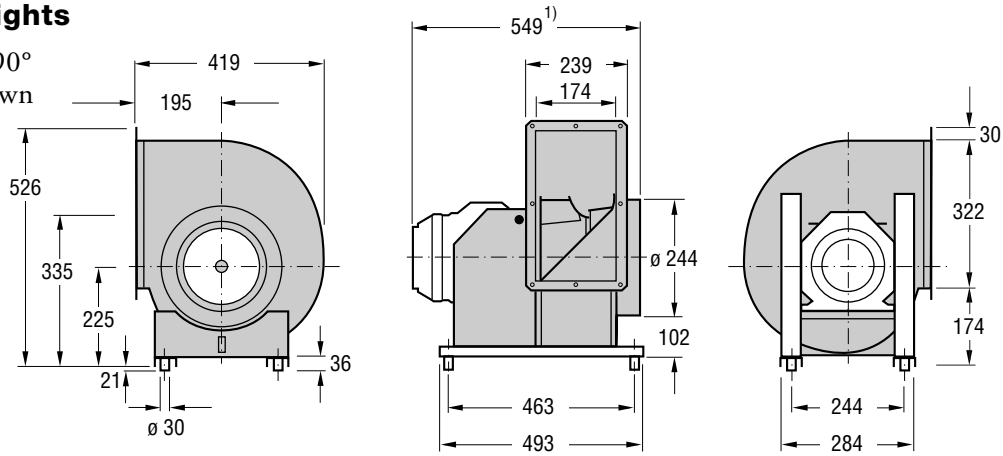

Right-hand version (viewed from drive side)

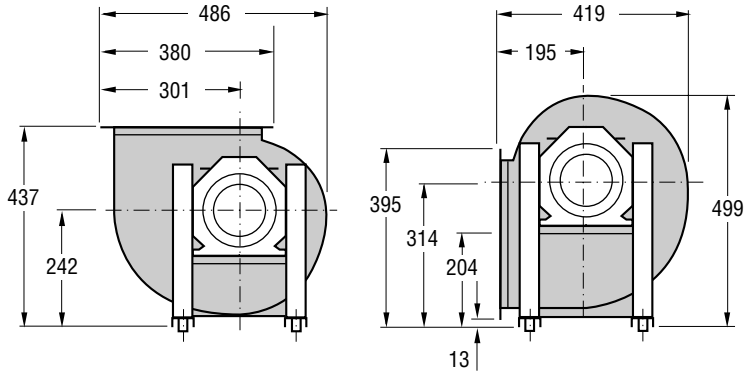

1) With max. motor size

Left-hand version (same dimensions as the right-hand version)

Weight (kg)

GTLF-1-025: 12,9

Outlet flange

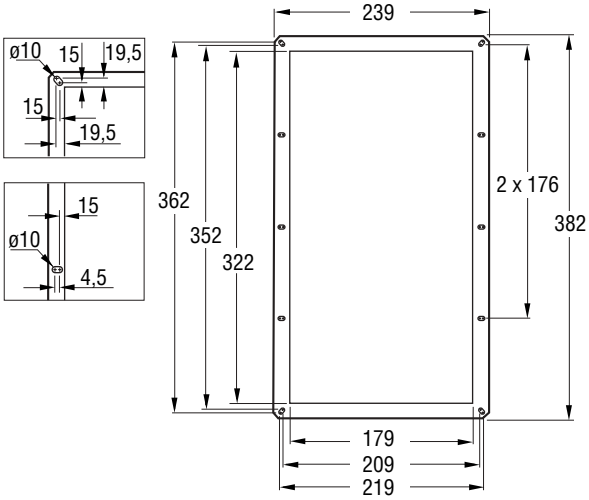

Motor data

Number of poles	Rated output kW	IEC Size	Motor code	Speed	Weight, kg	Hub code	Remark
4	1,1	90S	APAL-4-90110-c-d	1410	13,0	HULF-1-025-c-24-0	Motor code: c, d: see ordering codes page 59
6	0,37	80A	APAL-6-90037-c-d	915	9,0	HULF-1-025-c-19-0	Hub code: c = 1, right-hand version
4/6	1,5/0,45	90L	ATAL-4-90150-c-d	1400/930	16,0	HULF-1-025-c-24-0	c = 2, left-hand versionrande
4/8	1,1/0,26	90S	ARAL-4-90110-c-d	1410/700	13,0	HULF-1-025-c-24-0	

Fan Charts – Acoustic Data – GTLF-1-025

Direct driven, single-inlet, forward-curved blades

Impeller diameter: 250 mm

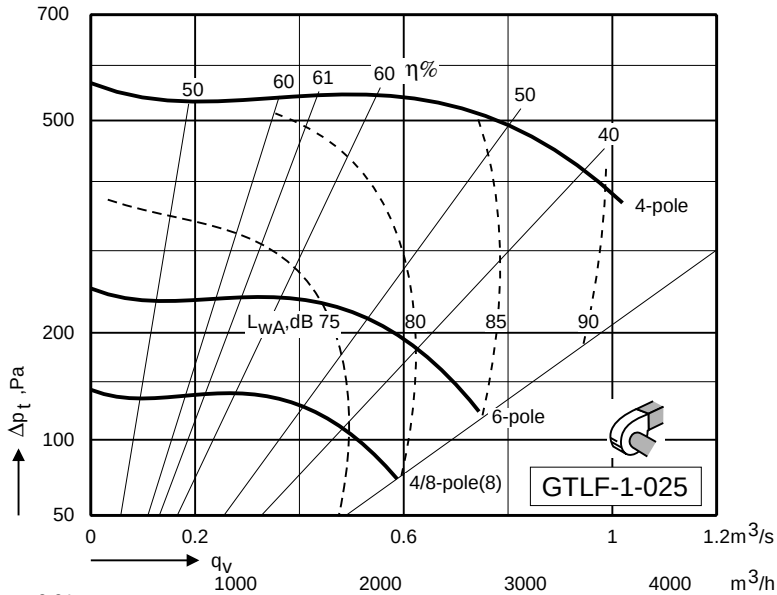

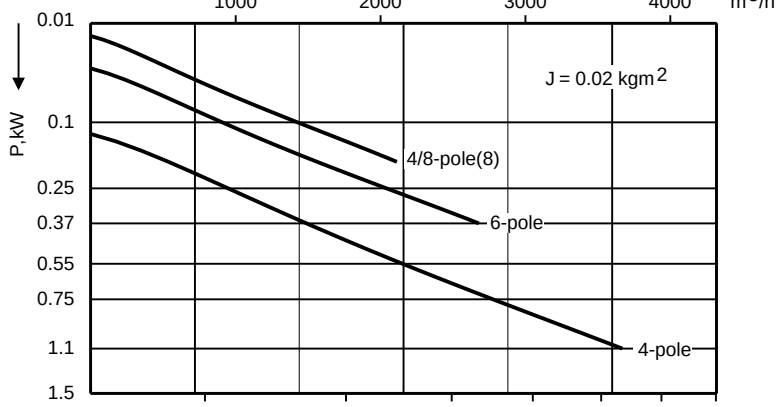

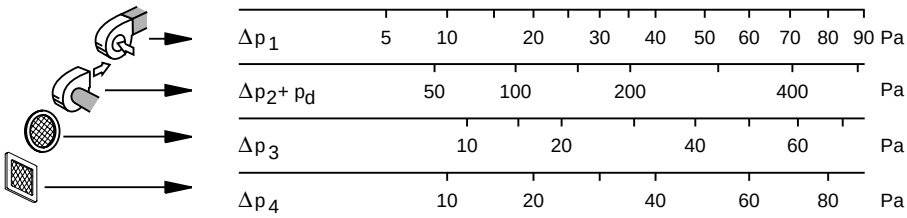

Acoustic Data

A-weighted sound power levels L_{WA} on the outlet side of a fan with the inlet and outlet ducted are specified in the chart. Correction figures can be read from the adjacent table. The following formula is used for breaking down the sound each octave band and each sound path:

$$L_{wokt(s)}=L_{WA}+K_{okt(s)}$$

where K_{okt} can be obtained from the table. The following formula can be used for calculating the A-weighted sound power level on each sound path:

$$L_{WA(s)}=L_{WA}+[L_{wA(s)}-L_{WA}]$$

where the correction figure $L_{wA(s)} - L_{wA}$ can be obtained from the table.
The table also includes correction figure $L_{wt(s)} - L_{wA(s)}$ that can be used for obtaining the total sound power level on each sound path:

$$L_{wt(s)}=L_{WA(s)}+[L_{wt(s)}-L_{WA(s)}]$$

Sound path (s)	Speed range r/min	Correction Kokt, dB, Octave band, mid-frequency, Hz 63	125	250	500	1 000	2 000	4 000	8 000	$L_{WA(s)} - L_{WA}$ dB	$L_{Wt(s)} - L_{WA(s)}$ dB
To outlet duct (1)	0 – 1116	4	5	1	-3	-7	-10	-10	-12	0	9,0
	1117 – 2233	5	4	-1	-6	-5	-8	-9	-11	0	8,7
	2234 – 3000	5	2	-3	-5	-7	-7	-8	-11	0	7,9
To inlet duct (2)	0 – 1116	8	-1	-4	-8	-6	-12	-13	-19	-2,4	11,5
	1117 – 2233	7	1	-8	-11	-6	-10	-10	-15	-2,0	10,4
	2234 – 3000	6	1	-5	-9	-9	-8	-9	-12	-1,7	9,6
Through the casing (3)	0 – 1116	-8	-6	-5	-4	-7	-12	-17	-22	-2,6	4,1
	1117 – 2233	-8	-7	-8	-10	-7	-9	-17	-23	-3,3	3,2
	2234 – 3000	-8	-7	-10	-10	-8	-6	-13	-20	-2,1	2,2
To fan outlet (open-discharge fan) (4)	0 – 1116	-15	-3	-3	-5	-7	-10	-10	-12	-1,3	3,9
	1117 – 2233	-16	-6	-5	-8	-5	-8	-9	-11	-0,6	2,2
	2234 – 3000	-18	-10	-7	-6	-7	-7	-8	-11	-0,6	1,4

Dimensions and Weights – Motor Data – GTLB-1-025

Dimensions and Weights

Right-hand version with 90° direction of discharge shown

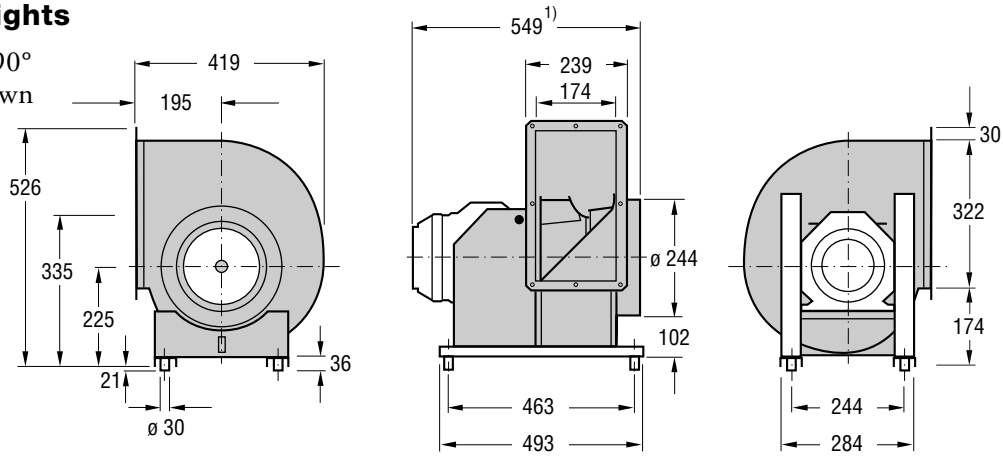

Right-hand version (viewed from drive side)

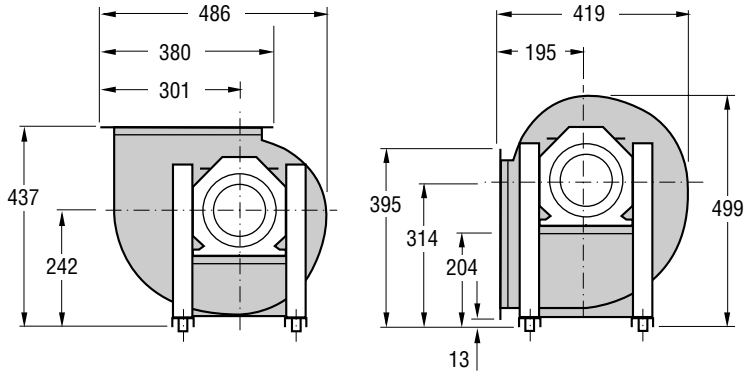

1) With max. motor size

Left-hand version (same dimensions as the right-hand version)

Weight (kg)

GTLB-1-025: 13,4

Outlet flange

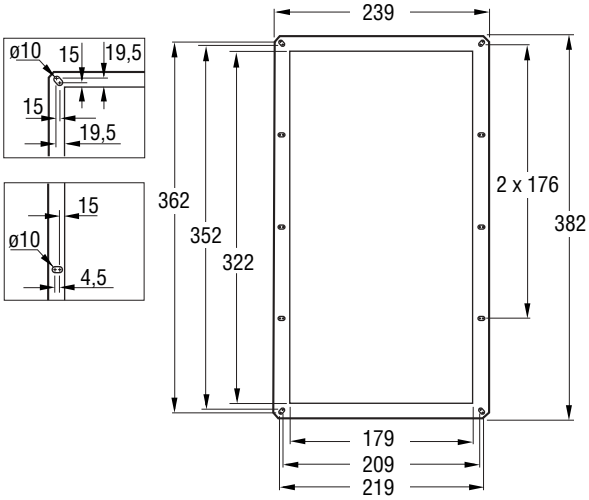

Motor data

Number of poles	Rated output kW	IEC Size	Motor code	Speed	Weight, kg	Hub code	Remark
4	0,25	71A	APAL-4-90025-c-d	1410	5,5	HULB-1-025-c-14-0	Motor code: c, d: see ordering codes page 59
2	0,55	71B	APAL-2-90055-c-d	2830	5,5	HULB-1-025-c-14-0	Hub code: c = 1, right-hand version
4/6	0,3/0,1	71B	ATAL-4-90030-c-d	1350/900	6,5	HULB-1-025-c-14-0	c = 2, left-hand versionrande
4/8	0,37/0,09	71B	ARAL-4-90037-c-d	1360/700	6,5	HULB-1-025-c-14-0	
2/4	0,55/0,12	71B	ARAL-2-90055-c-d	2700/1470	6,5	HULB-1-025-c-14-0	

Fan Charts – Acoustic Data – GTLB-1-025

Direct driven, single-inlet, backward-curved blades

Impeller diameter: 250 mm

Only the GTLB is available in the smoke extraction version.

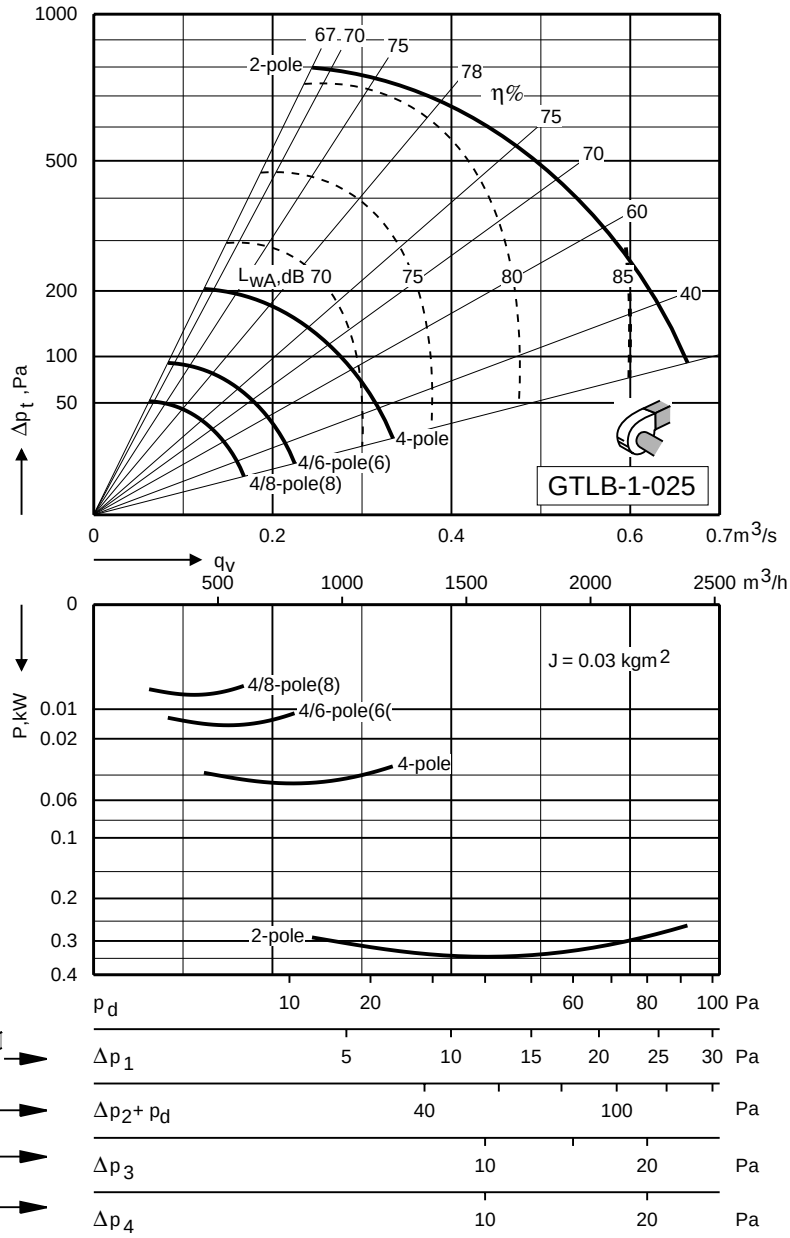

Acoustic Data

A-weighted sound power levels L_{WA} on the outlet side of a fan with the inlet and outlet ducted are specified in the chart. Correction figures can be read from the adjacent table. The following formula is used for breaking down the sound each octave band and each sound path:

$$L_{wokt(s)} = L_{WA} + K_{okt(s)}$$

where K_{okt} can be obtained from the table. The following formula can be used for calculating the A-weighted sound power level on each sound path:

$$L_{WA(s)} = L_{WA} + [L_{wA(s)} - L_{WA}]$$

where the correction figure $L_{wA(s)} - L_{wA}$ can be obtained from the table.
The table also includes correction figure $L_{wt(s)} - L_{wA(s)}$ that can be used for obtaining the total sound power level on each sound path:

$$L_{wt(s)} = L_{WA(s)} + [L_{wt(s)} - L_{WA(s)}]$$

Sound path (s)	Speed range r/min	Correction Kokt, dB Octave band, mid-frequency, Hz 63	125	250	500	1 000	2 000	4 000	8 000	$L_{WA(s)} - L_{WA}$ dB	$L_{Wt(s)} - L_{WA(s)}$ dB
To outlet duct (1)	0 – 1928	1	2	3	-4	-7	-8	-13	-16	0	7,5
	1929 – 3000	-2	0	-7	0	-7	-10	-12	-15	0	5,1
To inlet duct (2)	0 – 1928	1	2	3	-4	-5	-10	-13	-18	0	7,6
	1929 – 3000	-1	0	-8	0	-5	-11	-12	-17	0,3	5,1
Through the casing (3)	0 – 1928	-7	-5	-4	-9	-12	-14	-21	-31	-6,1	6,7
	1929 – 3000	-11	-10	-10	-8	-11	-18	-23	-34	-7	4,3
To fan outlet (open-discharge fan) (4)	0 – 1928	-16	-6	-1	-5	-7	-8	-13	-16	-1,3	3,9
	1929 – 3000	-21	-9	-11	-1	-7	-10	-12	-15	-0,8	2,3

Dimensions and Weights – Motor Data – GTLF-1-028

Dimensions and Weights

Right-hand version with 90° direction of discharge shown

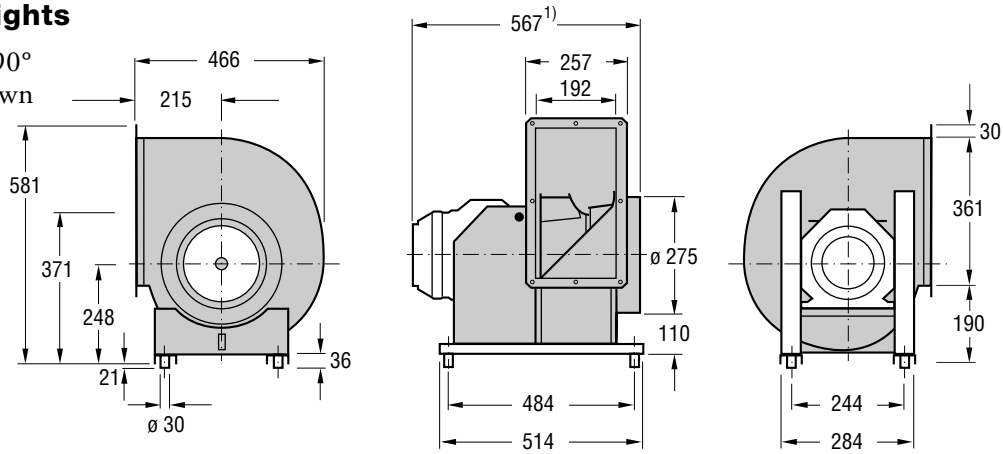

Right-hand version (viewed from drive side)

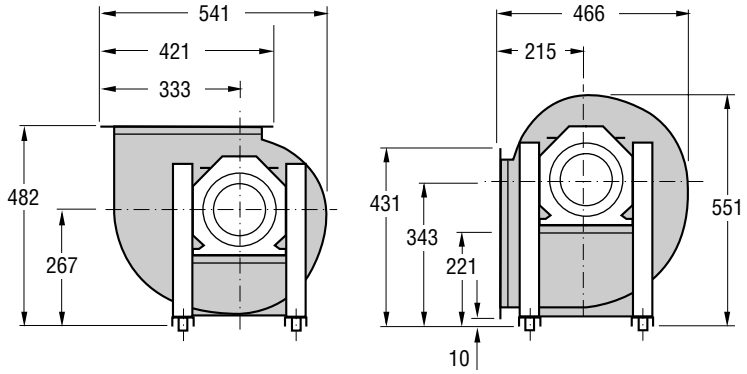

1) With max. motor size

Left-hand version (same dimensions as the right-hand version)

90° **0°** **270°**

Weight (kg)

GTLF-1-028: 15,2

Outlet flange

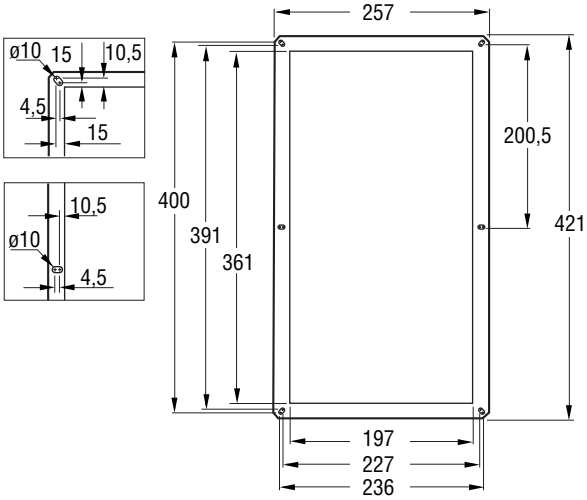

Motor data

Number of poles	Rated output kW	IEC Size	Motor code	Speed	Weight, kg	Hub code	Remark
4	1,5	90L	APAL-4-90150-c-d	1420	16,0	HULF-1-028-c-24-0	Motor code: c, d: see ordering codes page 59
6	0,55	80B	APAL-6-90055-c-d	900	10,0	HULF-1-028-c-19-0	
4/6	1,5/0,45	90L	ATAL-4-90150-c-d	1400/930	16,0	HULF-1-028-c-24-0	Hub code: c = 1, right-hand version
4/8	1,7/0,35	90L	ARAL-4-90170-c-d	1390/700	16,0	HULF-1-028-c-24-0	c = 2, left-hand versionrande

Fan Charts – Acoustic Data – GTLF-1-028

Direct driven, single-inlet, forward-curved blades

Impeller diameter: 280 mm

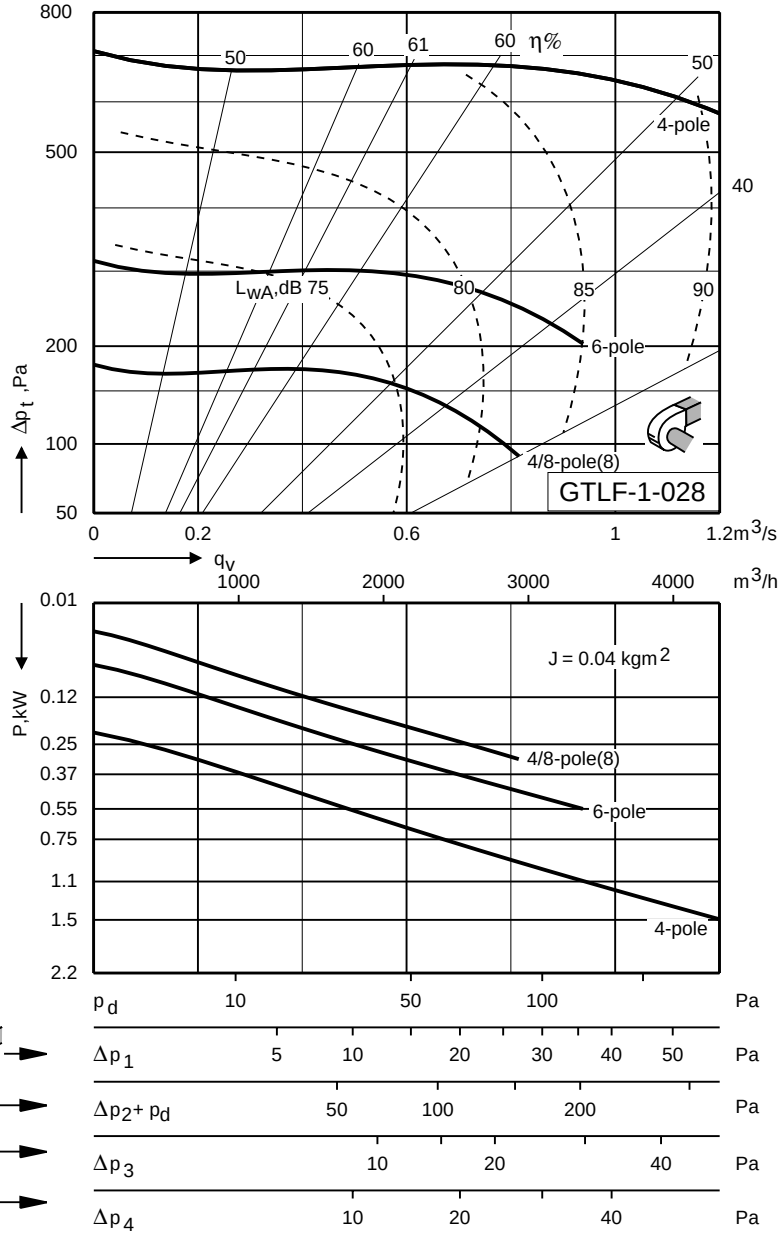

Acoustic Data

A-weighted sound power levels L_{WA} on the outlet side of a fan with the inlet and outlet ducted are specified in the chart. Correction figures can be read from the adjacent table. The following formula is used for breaking down the sound each octave band and each sound path:

$$L_{wokt(s)} = L_{WA} + K_{okt(s)}$$

where K_{okt} can be obtained from the table. The following formula can be used for calculating the A-weighted sound power level on each sound path:

$$L_{WA(s)} = L_{WA} + [L_{wA(s)} - L_{WA}]$$

where the correction figure $L_{wA(s)} - L_{wA}$ can be obtained from the table.
The table also includes correction figure $L_{wt(s)} - L_{wA(s)}$ that can be used for obtaining the total sound power level on each sound path:

$$L_{wt(s)} = L_{WA(s)} + [L_{wt(s)} - L_{WA(s)}]$$

Sound path (s)	Speed range r/min	Correction Kokt, dB, Octave band, mid-frequency, Hz 63	125	250	500	1 000	2 000	4 000	8 000	$L_{WA(s)} - L_{WA}$ dB	$L_{Wt(s)} - L_{WA(s)}$ dB
To outlet duct (1)	0 – 1010	4	5	-1	-3	-7	-9	-10	-12	0	8,8
	1011 – 1500	5	4	-2	-6	-5	-8	-9	-12	0	8,6
To inlet duct (2)	0 – 1010	7	-1	-4	-6	-5	-11	-13	-19	-1,6	10,0
	1011 – 1500	8	-1	-8	-10	-4	-9	-11	-15	-1,0	10,0
Through the casing (3)	0 – 1010	-8	-6	-7	-4	-7	-11	-17	-22	-2,5	3,7
	1011 – 1500	-8	-7	-9	-10	-7	-9	-17	-24	-3,4	3,1
To fan outlet (open-discharge fan) (4)	0 – 1010	-13	-3	-4	-4	-7	-9	-10	-12	-1,0	3,6
	1011 – 1500	-14	-4	-5	-7	-5	-8	-9	-12	-0,6	2,7

Dimensions and Weights – Motor Data – GTLB-1-028

Dimensions and Weights

Right-hand version with 90° direction of discharge shown

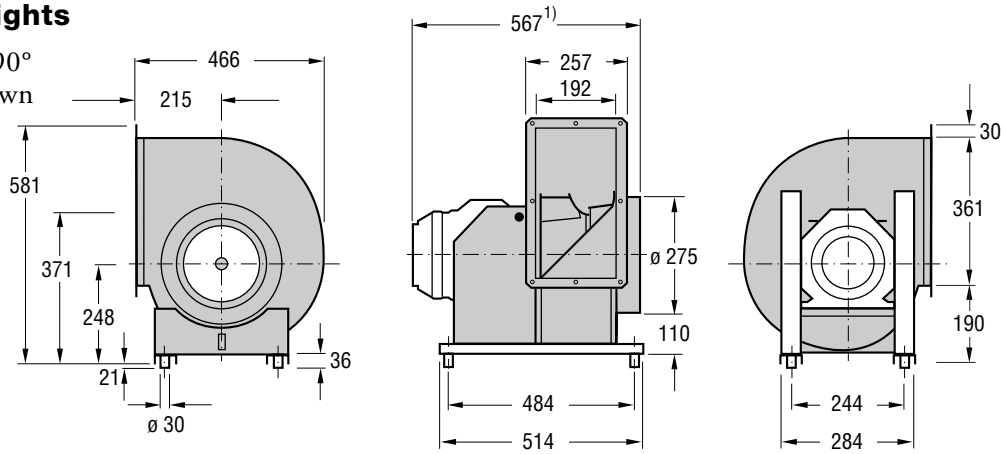

Right-hand version (viewed from drive side)

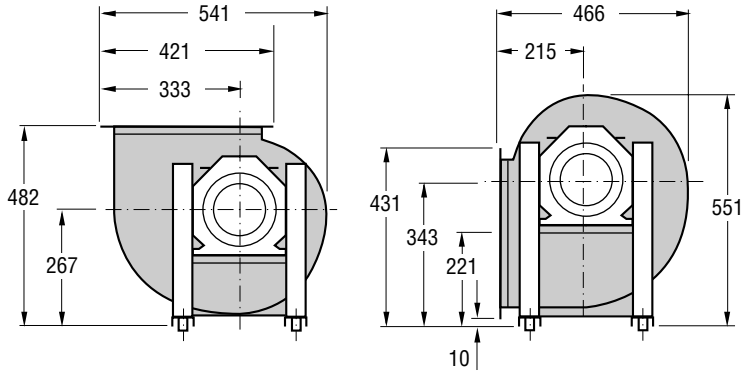

1) With max. motor size

Left-hand version (same dimensions as the right-hand version)

90° **0°** **270°**

Weight (kg)

GTLB-1-028: 14,9

Outlet flange

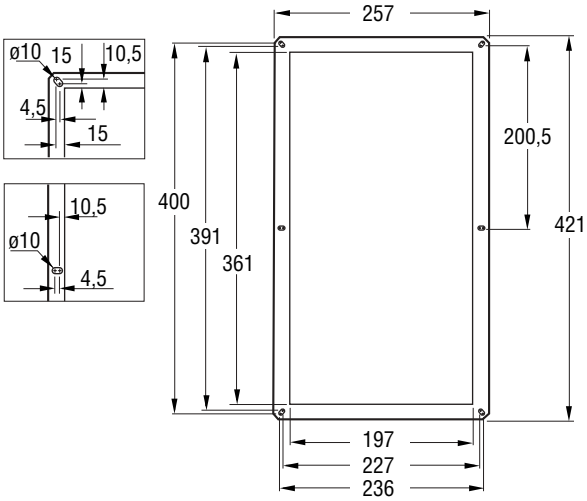

Motor data

Number of poles	Rated output kW	IEC Size	Motor code	Speed	Weight, kg	Hub code	Remark
4	0,25	71A	APAL-4-90025-c-d	1410	5,5	HULB-1-028-c-14-0	Motor code: c, d: see ordering codes page 59
2	0,75	80A	APAL-2-90075-c-d	2870	9,0	HULB-1-028-c-19-0	
4/6	0,3/0,1	71B	ATAL-4-90030-c-d	1350/900	6,5	HULB-1-028-c-14-0	Hub code: c = 1, right-hand version
4/8	0,37/0,09	71B	ARAL-4-90037-c-d	1360/700	6,5	HULB-1-028-c-14-0	c = 2, left-hand versionrande
2/4	0,75/0,15	80A	ARAL-2-90075-c-d	2850/1430	9,0	HULB-1-028-c-19-0	

Fan Charts – Acoustic Data – GTLB-1-028

Direct driven, single-inlet, backward-curved blades

Impeller diameter: 280 mm

Only the GTLB is available in the smoke extraction version.

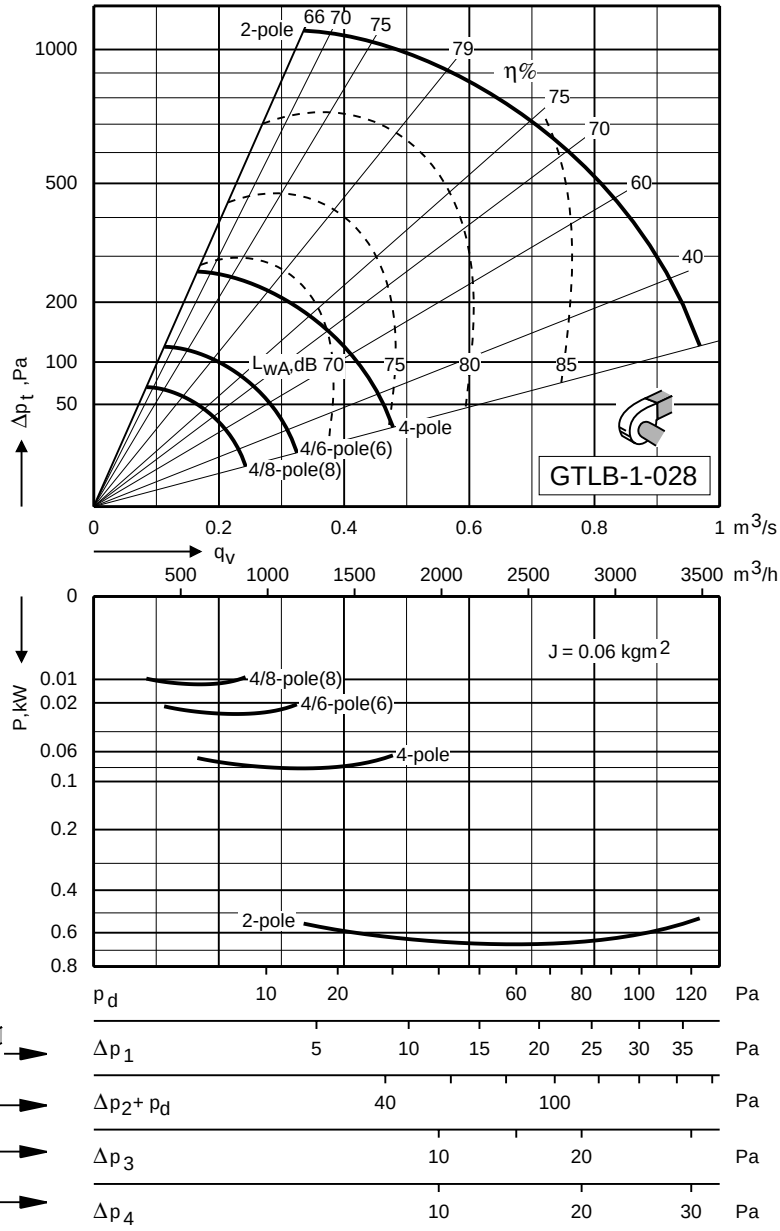

Acoustic Data

A-weighted sound power levels L_{WA} on the outlet side of a fan with the inlet and outlet ducted are specified in the chart. Correction figures can be read from the adjacent table. The following formula is used for breaking down the sound each octave band and each sound path:

$$L_{wokt(s)} = L_{WA} + K_{okt(s)}$$

where K_{okt} can be obtained from the table. The following formula can be used for calculating the A-weighted sound power level on each sound path:

$$L_{WA(s)} = L_{WA} + [L_{wA(s)} - L_{WA}]$$

where the correction figure $L_{wA(s)} - L_{wA}$ can be obtained from the table.
The table also includes correction figure $L_{wt(s)} - L_{wA(s)}$ that can be used for obtaining the total sound power level on each sound path:

$$L_{wt(s)} = L_{WA(s)} + [L_{wt(s)} - L_{WA(s)}]$$

Sound path (s)	Speed range r/min	Correction Kokt, dB, Octave band, mid-frequency, Hz 63	125	250	500	1 000	2 000	4 000	8 000	$L_{WA(s)} - L_{WA}$ dB	$L_{Wt(s)} - L_{WA(s)}$ dB
To outlet duct (1)	0 – 1928	1	2	3	-4	-7	-8	-13	-16	0	7,6
	1929 – 3000	-1	-1	-7	-1	-6	-8	-12	-16	0	4,9
To inlet duct (2)	0 – 1928	1	1	3	-2	-5	-10	-12	-17	0,6	6,9
	1929 – 3000	-2	-2	-8	0	-4	-10	-11	-17	0,7	4,1
Through the casing (3)	0 – 1928	-7	-5	-4	-9	-12	-14	-21	-31	-6,1	6,7
	1929 – 3000	-9	-8	-10	-8	-12	-15	-23	-35	-6,9	5,0
To fan outlet (open-discharge fan) (4)	0 – 1928	-14	-5	0	-5	-7	-8	-13	-16	-1,1	4,3
	1929 – 3000	-20	-9	-10	-2	-6	-8	-12	-16	-0,5	1,9

Dimensions and Weights – Motor Data – GTLF-1-031

Dimensions and Weights

Right-hand version with 90° direction of discharge shown

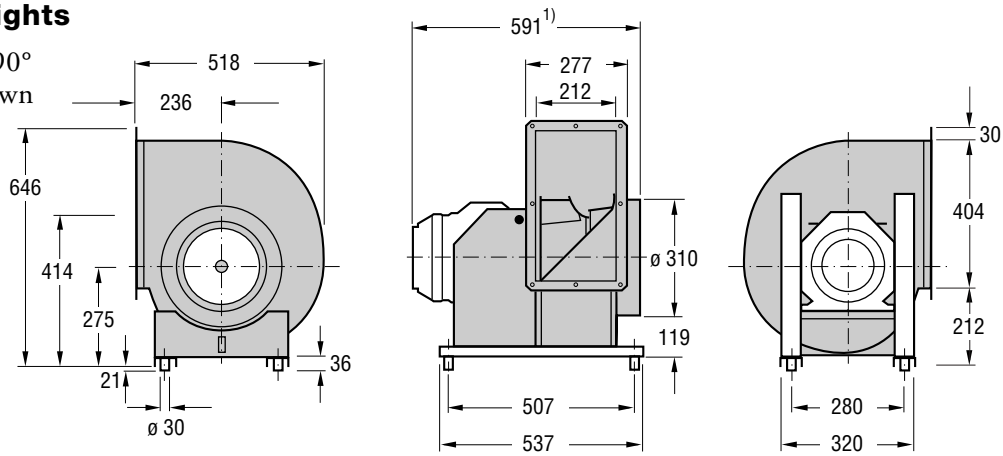

Right-hand version (viewed from drive side)

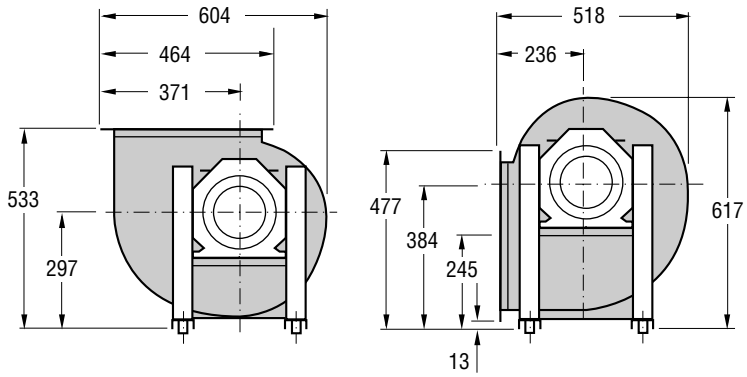

1) With max. motor size

Left-hand version (same dimensions as the right-hand version)

Weight (kg)

GTLF-1-031: 17,7

Outlet flange

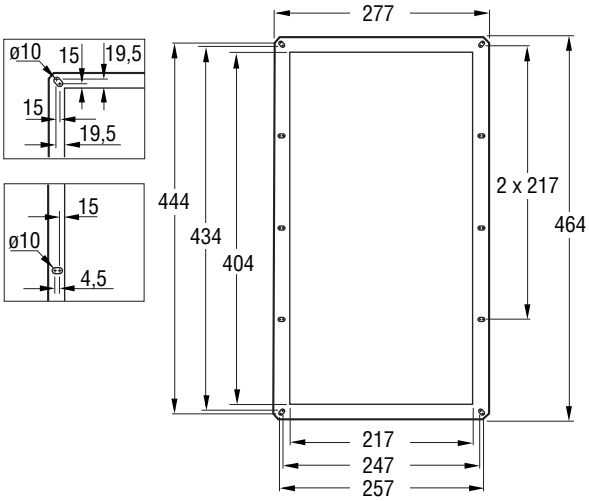

Motor data

Number of poles	Rated output kW	IEC Size	Motor code	Speed	Weight, kg	Hub code	Remark
4	3	100LB	APAL-4-90300-c-d	1430	24,0	HULF-1-031-c-28-0	Motor code: c, d: see ordering codes page 59
6	1,1	90L	APAL-6-90110-c-d	930	16,0	HULF-1-031-c-24-0	Hub code: c = 1, right-hand version
8	0,55	90L	APAL-8-90055-c-d	690	16,0	HULF-1-031-c-24-0	c = 2, left-hand versionrande
4/6	3/1	112M	ATAL-4-00300-c-d	1445/975	33,0	HULF-1-031-c-28-0	
4/8	2,8/0,6	100LB	ARAL-4-90280-c-d	1430/720	23,0	HULF-1-031-c-28-0	

Fan Charts – Acoustic Data – GTLF-1-031

Direct driven, single-inlet, forward-curved blades

Impeller diameter: 310 mm

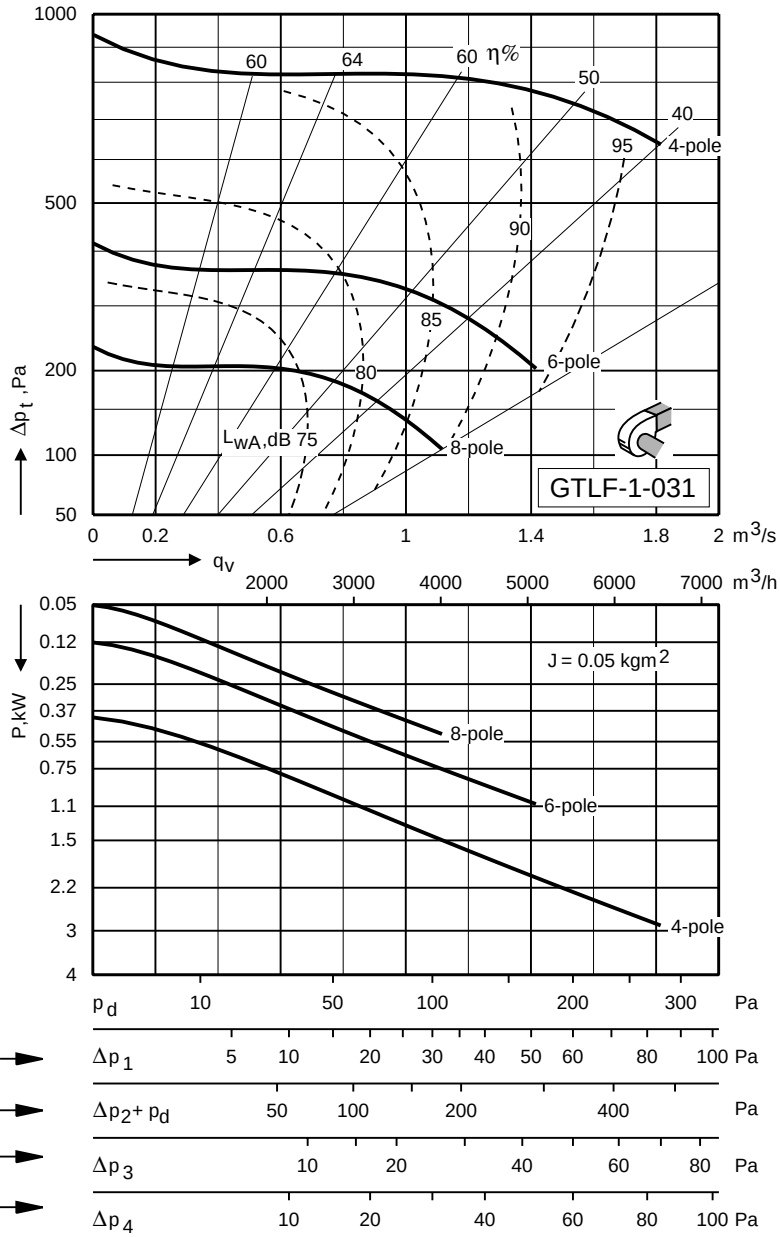

Acoustic Data

A-weighted sound power levels L_{WA} on the outlet side of a fan with the inlet and outlet ducted are specified in the chart. Correction figures can be read from the adjacent table. The following formula is used for breaking down the sound each octave band and each sound path:

$$L_{wokt(s)} = L_{WA} + K_{okt(s)}$$

where K_{okt} can be obtained from the table. The following formula can be used for calculating the A-weighted sound power level on each sound path:

$$L_{WA(s)} = L_{WA} + [L_{wA(s)} - L_{WA}]$$

where the correction figure $L_{wA(s)} - L_{wA}$ can be obtained from the table.
The table also includes correction figure $L_{wt(s)} - L_{wA(s)}$ that can be used for obtaining the total sound power level on each sound path:

$$L_{wt(s)} = L_{WA(s)} + [L_{wt(s)} - L_{WA(s)}]$$

Sound path (s)	Speed range r/min	Correction Kokt, dB, Octave band, mid-frequency, Hz 63	125	250	500	1 000	2 000	4 000	8 000	$L_{WA(s)} - L_{WA}$ dB	$L_{Wt(s)} - L_{WA(s)}$ dB
To outlet duct (1)	0 – 1010	3	4	-2	-2	-7	-9	-10	-11	0	8,0
	1011 – 1500	5	4	-2	-6	-5	-8	-9	-13	0	8,6
To inlet duct (2)	0 – 1010	7	-3	-6	-5	-4	-10	-12	-19	-0,8	9,0
	1011 – 1500	7	-1	-7	-9	-3	-8	-10	-15	-0,1	8,5
Through the casing (3)	0 – 1010	-9	-6	-4	-3	-7	-11	-17	-21	-1,9	3,9
	1011 – 1500	-8	-7	-6	-10	-7	-9	-17	-25	-3,3	3,5
To fan outlet (open-discharge fan) (4)	0 – 1010	-13	-3	-5	-3	-7	-9	-10	-11	-0,7	3,4
	1011 – 1500	-12	-4	-5	-7	-5	-8	-9	-13	-0,6	2,7

Dimensions and Weights – Motor Data – GTLB-1-031

Dimensions and Weights

Right-hand version with 90° direction of discharge shown

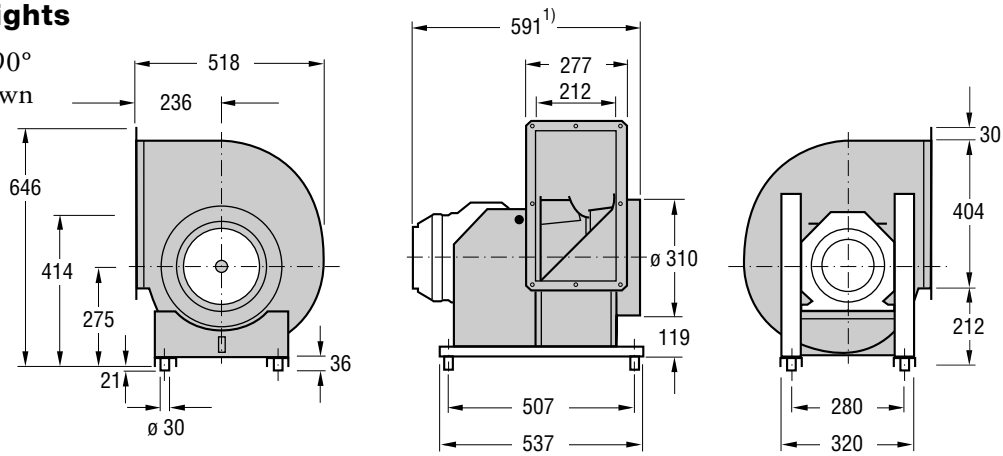

1) With max. motor size

Right-hand version (viewed from drive side)

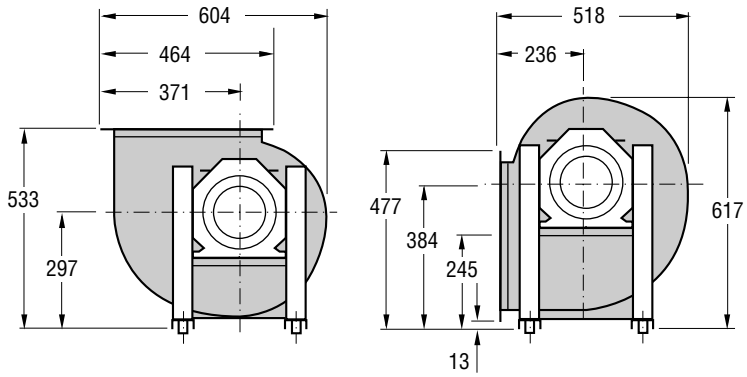

Left-hand version (same dimensions as the right-hand version)

Weight (kg)

GTLB-1-031: 18,0

Outlet flange

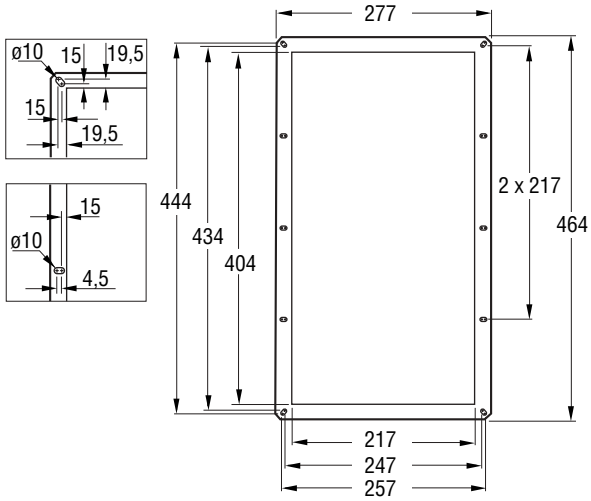

Motor data

Number of poles	Rated output kW	IEC Size	Motor code	Speed	Weight, kg	Hub code	Remark
4	0,25	71A	APAL-4-90025-c-d	1410	5,5	HULB-1-031-c-14-0	Motor code: c, d: see ordering codes page 59
2	1,5	90S	APAL-2-90150-c-d	2870	13,0	HULB-1-031-c-24-0	
4/6	0,3/0,1	71B	ATAL-4-90030-c-d	1350/900	6,5	HULB-1-031-c-14-0	Hub code: c = 1, right-hand version
4/8	0,37/0,09	71B	ARAL-4-90037-c-d	1360/700	6,5	HULB-1-031-c-14-0	c = 2, left-hand versionrande
2/4	1,5/0,33	90S	ARAL-2-90150-c-d	2860/1460	13,0	HULB-1-031-c-24-0	

Fan Charts – Acoustic Data – GTLB-1-031

Direct driven, single-inlet, backward-curved blades

Impeller diameter: 310 mm

Only the GTLB is available in the smoke extraction version.

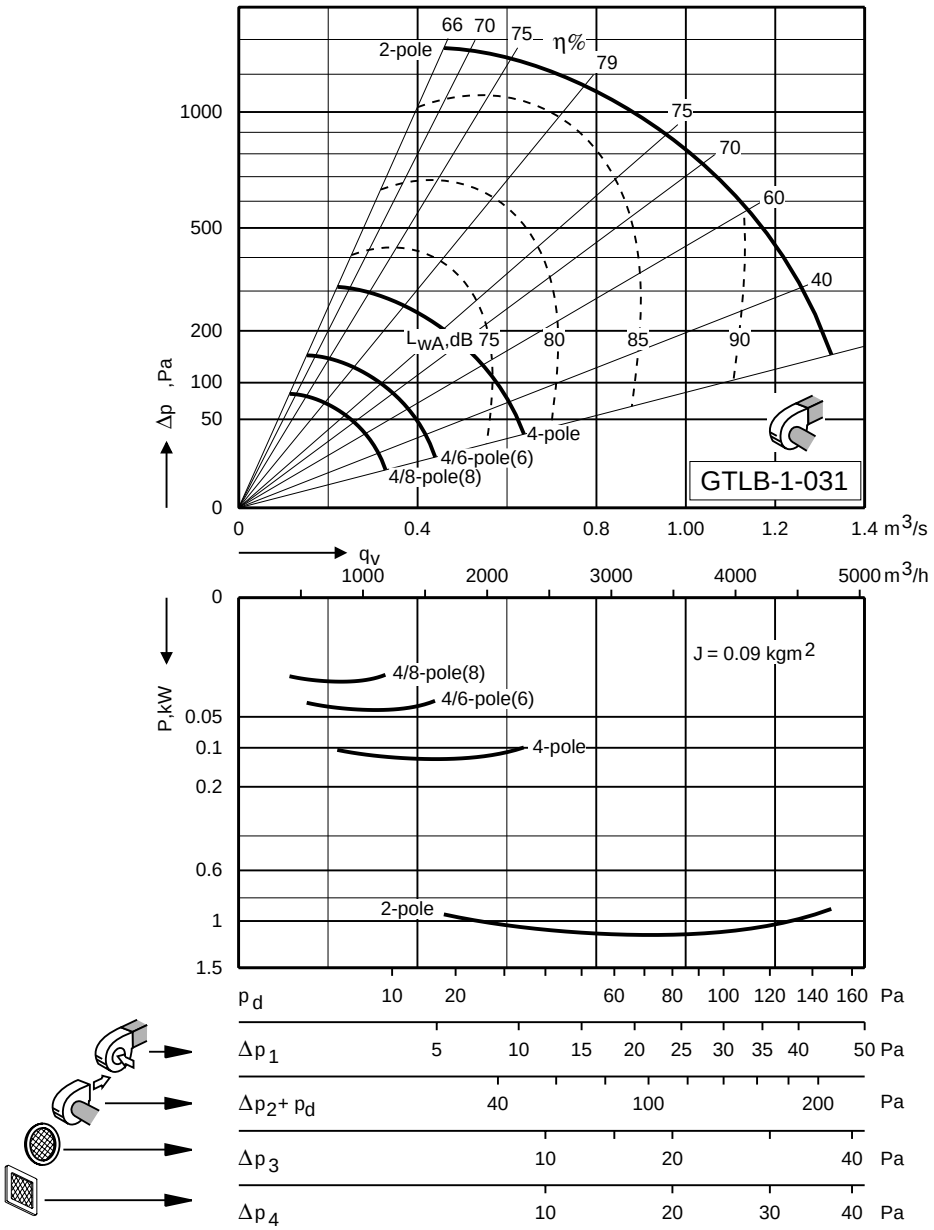

Acoustic Data

A-weighted sound power levels L_{WA} on the outlet side of a fan with the inlet and outlet ducted are specified in the chart. Correction figures can be read from the adjacent table. The following formula is used for breaking down the sound each octave band and each sound path:

$$L_{wokt(s)} = L_{WA} + K_{okt(s)}$$

where K_{okt} can be obtained from the table. The following formula can be used for calculating the A-weighted sound power level on each sound path:

$$L_{WA(s)} = L_{WA} + [L_{wA(s)} - L_{WA}]$$

where the correction figure $L_{wA(s)} - L_{wA}$ can be obtained from the table.
The table also includes correction figure $L_{wt(s)} - L_{wA(s)}$ that can be used for obtaining the total sound power level on each sound path:

$$L_{wt(s)} = L_{WA(s)} + [L_{wt(s)} - L_{WA(s)}]$$

Sound path (s)	Speed range r/min	Correction Kokt, dB, Octave band, mid-frequency, Hz: 63	125	250	500	1 000	2 000	4 000	8 000	$L_{WA(s)} - L_{WA}$ dB	$L_{Wt(s)} - L_{WA(s)}$ dB
To outlet duct (1)	0 – 1928	1	-1	4	-4	-7	-8	-15	-17	0	7,3
	1929 – 3000	-1	-2	-6	-2	-6	-7	-12	-16	0	4,5
To inlet duct (2)	0 – 1928	1	-1	3	-1	-5	-10	-11	-16	0,9	6,4
	1929 – 3000	-2	-5	-9	0	-4	-8	-10	-16	1,0	3,4
Through the casing (3)	0 – 1928	-7	-8	-5	-9	-12	-14	-23	-32	-6,4	6,0
	1929 – 3000	-10	-12	-9	-9	-10	-15	-23	-35	-6,4	3,8
To fan outlet (open-discharge fan) (4)	0 – 1928	-13	-8	1	-5	-7	-8	-15	-17	-1,1	4,5
	1929 – 3000	-18	-9	-9	-3	-6	-7	-12	-16	-0,6	1,8

Dimensions and Weights – Motor Data – GTLF-1-035

Dimensions and Weights

Right-hand version with 90° direction of discharge shown

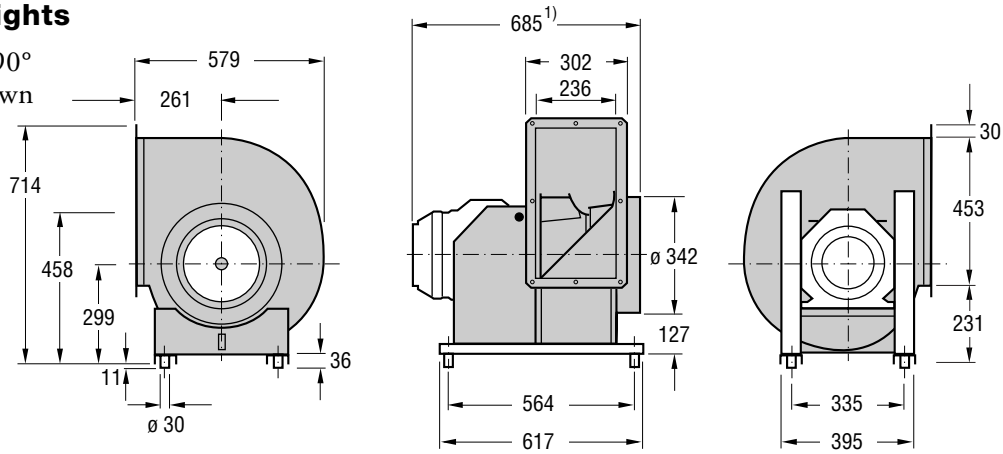

Right-hand version (viewed from drive side)

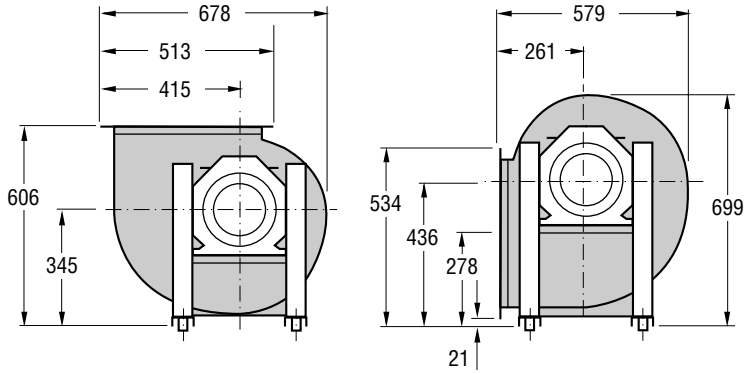

1) With max. motor size

Left-hand version (same dimensions as the right-hand version)

90° **0°** **270°**

Weight (kg)

GTLF-1-035: 27,6

Outlet flange

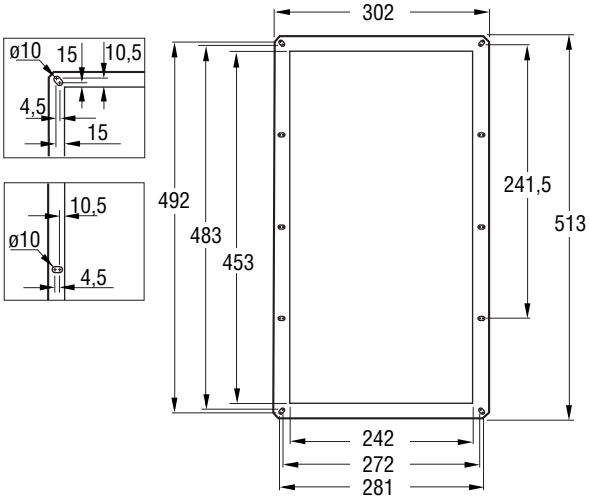

Motor data

Number of poles	Rated output kW	IEC Size	Motor code	Speed	Weight, kg	Hub code	Remark
4	3	100LB	APAL-4-90300-c-d	1430	24,0	HULF-1-035-c-28-0	Motor code: c, d: see ordering codes page 59
6	1,5	100L	APAL-6-90150-c-d	950	23,0	HULF-1-035-c-28-0	
4/6	3/1	112M	ATAL-4-00300-c-d	1445/975	33,0	HULF-1-035-c-28-0	Hub code: c = 1, right-hand version
4/8	2,8/0,6	100LB	ARAL-4-90280-c-d	1430/720	23,0	HULF-1-035-c-28-0	c = 2, left-hand versionrande

Fan Charts – Acoustic Data – GTLF-1-035

Direct driven, single-inlet, forward-curved blades

Impeller diameter: 350 mm

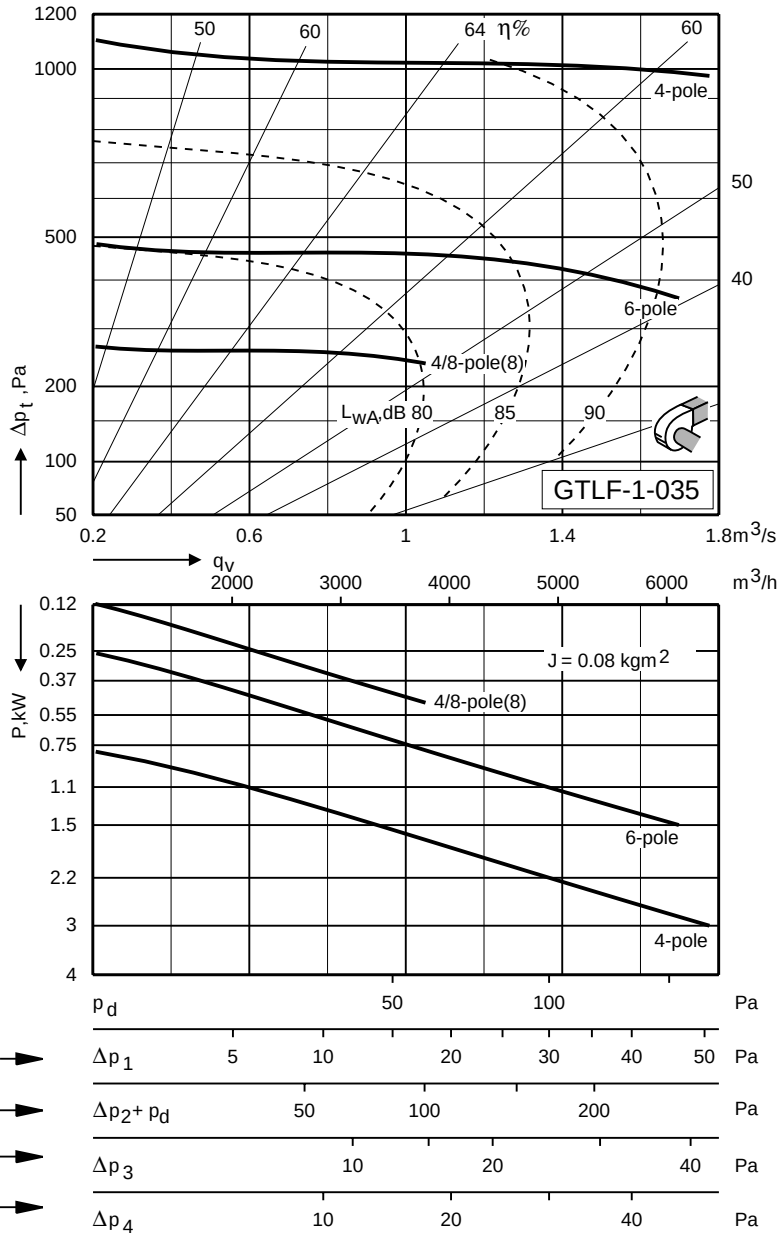

Acoustic Data

A-weighted sound power levels L_{WA} on the outlet side of a fan with the inlet and outlet ducted are specified in the chart. Correction figures can be read from the adjacent table. The following formula is used for breaking down the sound each octave band and each sound path:

$$L_{wokt(s)} = L_{WA} + K_{okt(s)}$$

where K_{okt} can be obtained from the table. The following formula can be used for calculating the A-weighted sound power level on each sound path:

$$L_{WA(s)} = L_{WA} + [L_{wA(s)} - L_{WA}]$$

where the correction figure $L_{wA(s)} - L_{wA}$ can be obtained from the table.
The table also includes correction figure $L_{wt(s)} - L_{wA(s)}$ that can be used for obtaining the total sound power level on each sound path:

$$L_{wt(s)} = L_{WA(s)} + [L_{wt(s)} - L_{WA(s)}]$$

Sound path (s)	Speed range r/min	Correction Kokt, dB, Octave band, mid-frequency, Hz 63	125	250	500	1 000	2 000	4 000	8 000	$L_{WA(s)} - L_{WA}$ dB	$L_{Wt(s)} - L_{WA(s)}$ dB
To outlet duct (1)	0 – 1010	4	3	-2	-3	-6	-8	-10	-13	0	7,9
	1011 – 1500	5	3	-3	-6	-5	-7	-9	-14	0	8,2
To inlet duct (2)	0 – 1010	6	0	-6	-5	-4	-7	-11	-18	-0,1	8,1
	1011 – 1500	7	-2	-9	-8	-3	-7	-10	-14	0,1	8,2
Through the casing (3)	0 – 1010	-8	-6	-4	-4	-6	-10	-17	-23	-1,8	3,8
	1011 – 1500	-8	-7	-7	-10	-7	-8	-17	-26	-3	3,2
To fan outlet (open-discharge fan) (4)	0 – 1010	-11	-3	-5	-4	-6	-8	-10	-13	-0,6	3,3
	1011 – 1500	-12	-3	-6	-7	-5	-7	-9	-14	-0,4	2,7

Dimensions and Weights – Motor Data – GTLB-1-035

Dimensions and Weights

Right-hand version with 90° direction of discharge shown

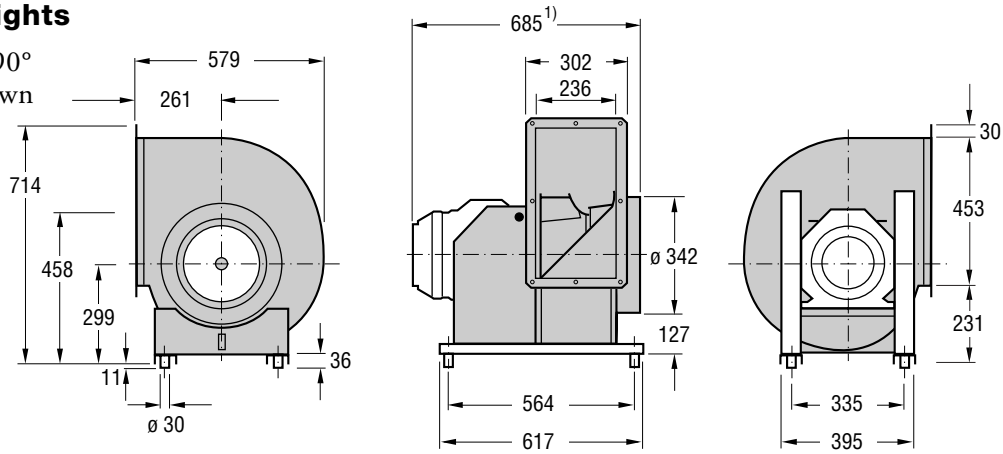

1) With max. motor size

Right-hand version (viewed from drive side)

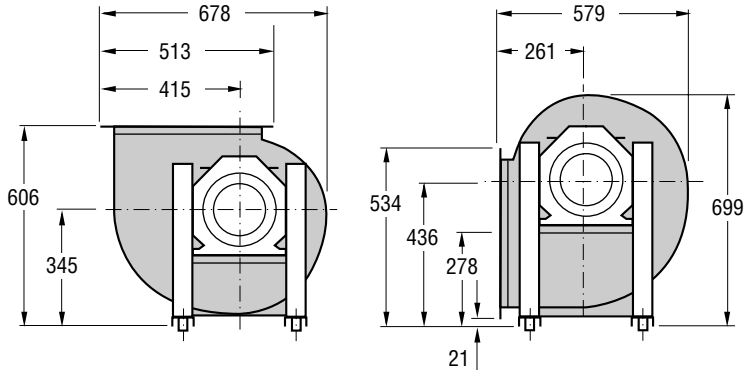

Left-hand version (same dimensions as the right-hand version)

90° **0°** **270°**

Weight (kg)

GTLB-1-035: 28,3

Outlet flange

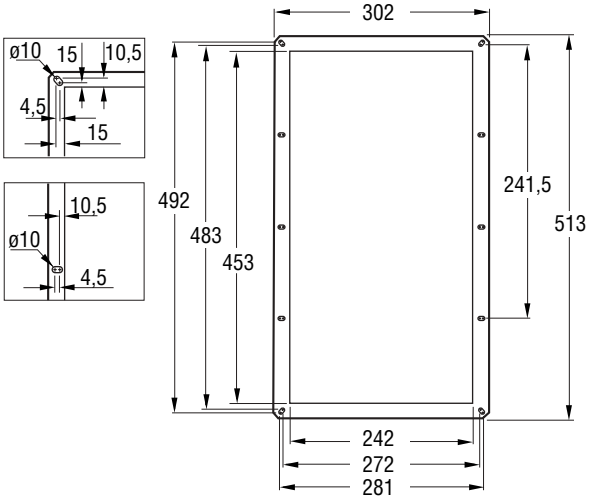

Motor data

Number of poles	Rated output kW	IEC Size	Motor code	Speed	Weight, kg	Hub code	Remark
4	0,37	71B	APAL-4-90037-c-d	1420	6,5	HULB-1-035-c-14-0	Motor code: c, d: see ordering codes page 59
2	2,2	90L	APAL-2-90220-c-d	2880	16,0	HULB-1-035-c-24-0	
4/6	0,45/0,15	80A	ATAL-4-90045-c-d	1390/945	8,5	HULB-1-035-c-19-0	Hub code: c = 1, right-hand version
4/8	0,37/0,09	71B	ARAL-4-90037-c-d	1360/700	6,5	HULB-1-035-c-14-0	c = 2, left-hand versionrande
2/4	2,2/0,45	90L	ARAL-2-90220-c-d	2860/1460	16,0	HULB-1-035-c-24-0	

Fan Charts – Acoustic Data – GTLB-1-035

Direct driven, single-inlet, backward-curved blades

Impeller diameter: 350 mm

Only the GTLB is available in the smoke extraction version.

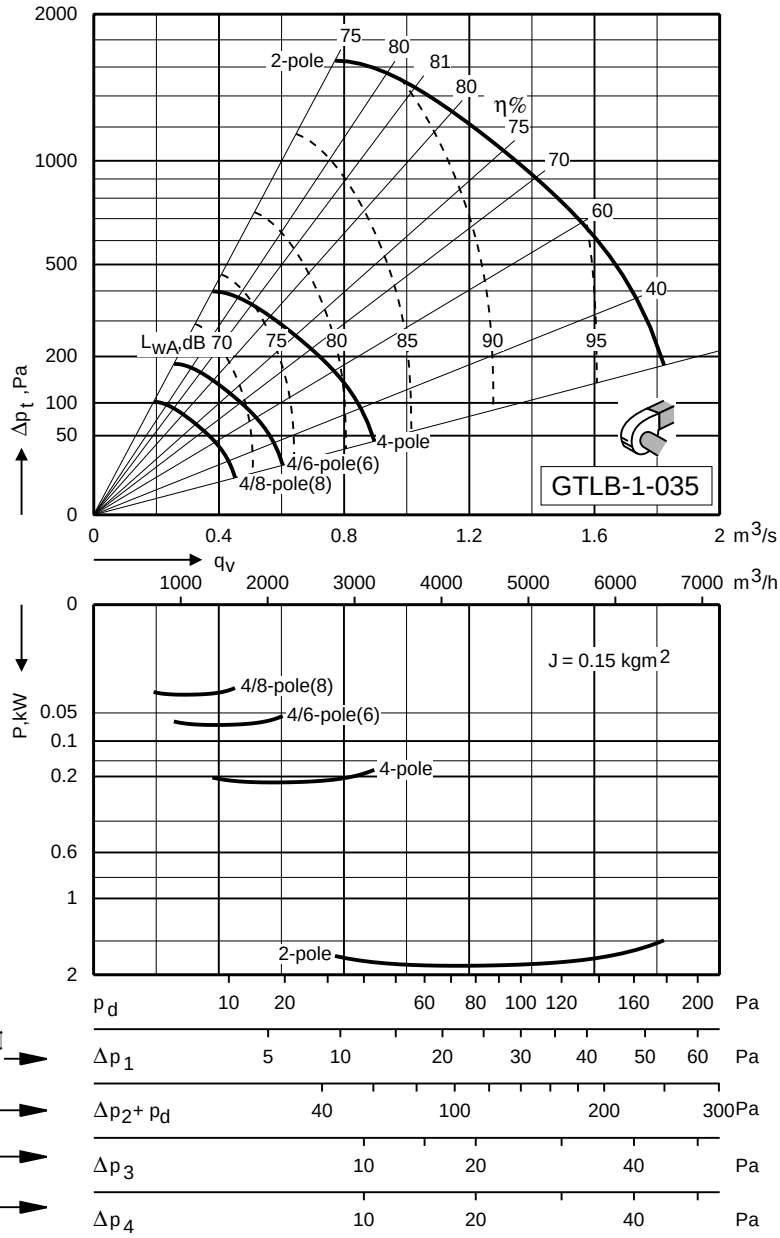

Acoustic Data

A-weighted sound power levels L_{WA} on the outlet side of a fan with the inlet and outlet ducted are specified in the chart. Correction figures can be read from the adjacent table. The following formula is used for breaking down the sound each octave band and each sound path:

$$L_{wokt(s)} = L_{WA} + K_{okt(s)}$$

where K_{okt} can be obtained from the table. The following formula can be used for calculating the A-weighted sound power level on each sound path:

$$L_{WA(s)} = L_{WA} + [L_{wA(s)} - L_{WA}]$$

where the correction figure $L_{wA(s)} - L_{wA}$ can be obtained from the table.
The table also includes correction figure $L_{wt(s)} - L_{wA(s)}$ that can be used for obtaining the total sound power level on each sound path:

$$L_{wt(s)} = L_{WA(s)} + [L_{wt(s)} - L_{WA(s)}]$$

Sound path (s)	Speed range r/min	Correction Kokt, dB, Octave band, mid-frequency, Hz 63	125	250	500	1 000	2 000	4 000	8 000	$L_{WA(s)} - L_{WA}$ dB	$L_{Wt(s)} - L_{WA(s)}$ dB
To outlet duct (1)	0 – 1928	1	0	3	-4	-6	-8	-14	-17	0	7,1
	1929 – 3000	-1	-3	-6	-2	-5	-7	-12	-16	0	4,3
To inlet duct (2)	0 – 1928	2	0	1	-1	-5	-9	-10	-14	0,9	6,3
	1929 – 3000	-2	-4	-8	-1	-4	-8	-10	-16	0,7	3,6
Through the casing (3)	0 – 1928	-7	-7	-4	-9	-11	-14	-22	-32	-5,9	6,1
	1929 – 3000	-9	-10	-9	-8	-11	-14	-23	-35	-6,3	4,3
To fan outlet (open-discharge fan) (4)	0 – 1928	-12	-6	0	-5	-6	-8	-14	-17	-0,9	4,1
	1929 – 3000	-18	-9	-9	-3	-5	-7	-12	-16	-0,3	1,7

Dimensions and Weights – Motor Data – GTLF-1-040

Dimensions and Weights

Right-hand version with 90° direction of discharge shown

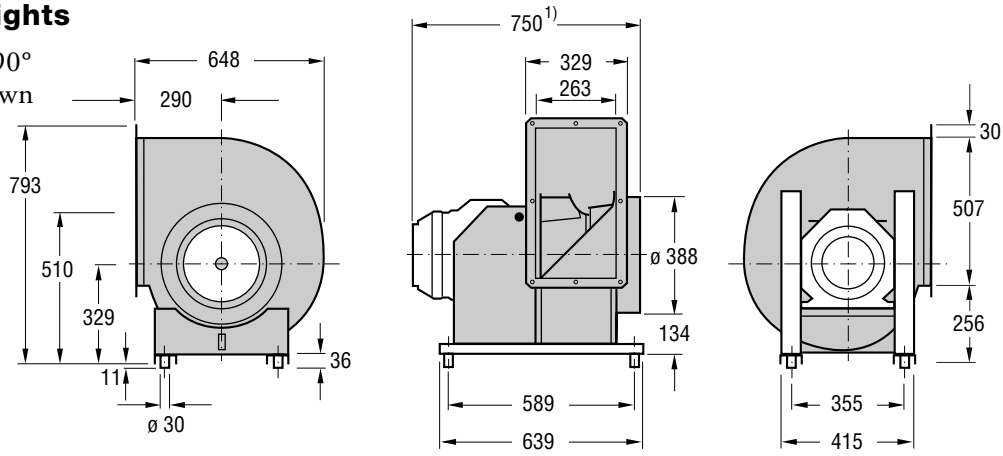

Right-hand version (viewed from drive side)

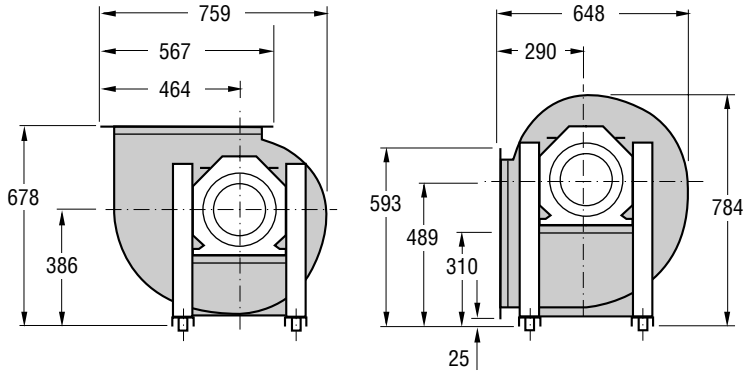

1) With max. motor size

Left-hand version (same dimensions as the right-hand version)

90° **0°** **270°**

Weight (kg)

GTLF-1-040: 32,5

Outlet flange

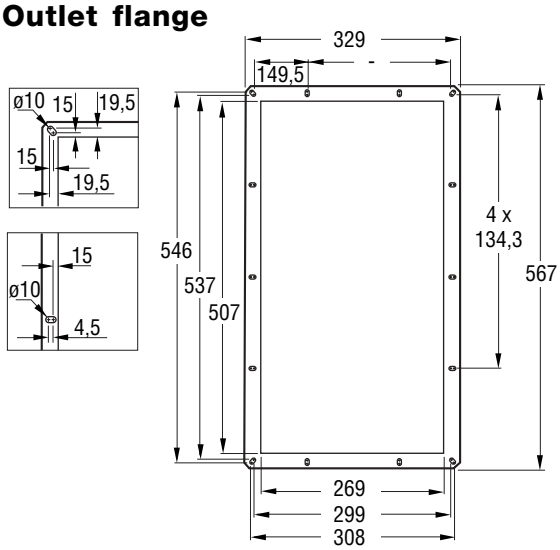

Motor data

Number of poles	Rated output kW	IEC Size	Motor code	Speed	Weight, kg	Hub code	Remark
4	5,5	132S	APAL-4-00550-c-d	1450	40,0	HULF-1-040-c-38-0	Motor code: c, d: see ordering codes page 59
6	2,2	112M	APAL-6-00220-c-d	940	27,0	HULF-1-040-c-28-0	Hub code: c = 1, right-hand version
8	1,1	100LB	APAL-8-90110-c-d	700	23,0	HULF-1-040-c-28-0	c = 2, left-hand versionrande
4/6	6/2	132M	ATAL-4-00600-c-d	1460/980	59,0	HULF-1-040-c-38-0	
4/8	5,0/1,0	132S	ARAL-4-00500-c-d	1450/725	48,0	HULF-1-040-c-38-0	

Fan Charts – Acoustic Data – GTLF-1-040

Direct driven, single-inlet, forward-curved blades

Impeller diameter: 400 mm

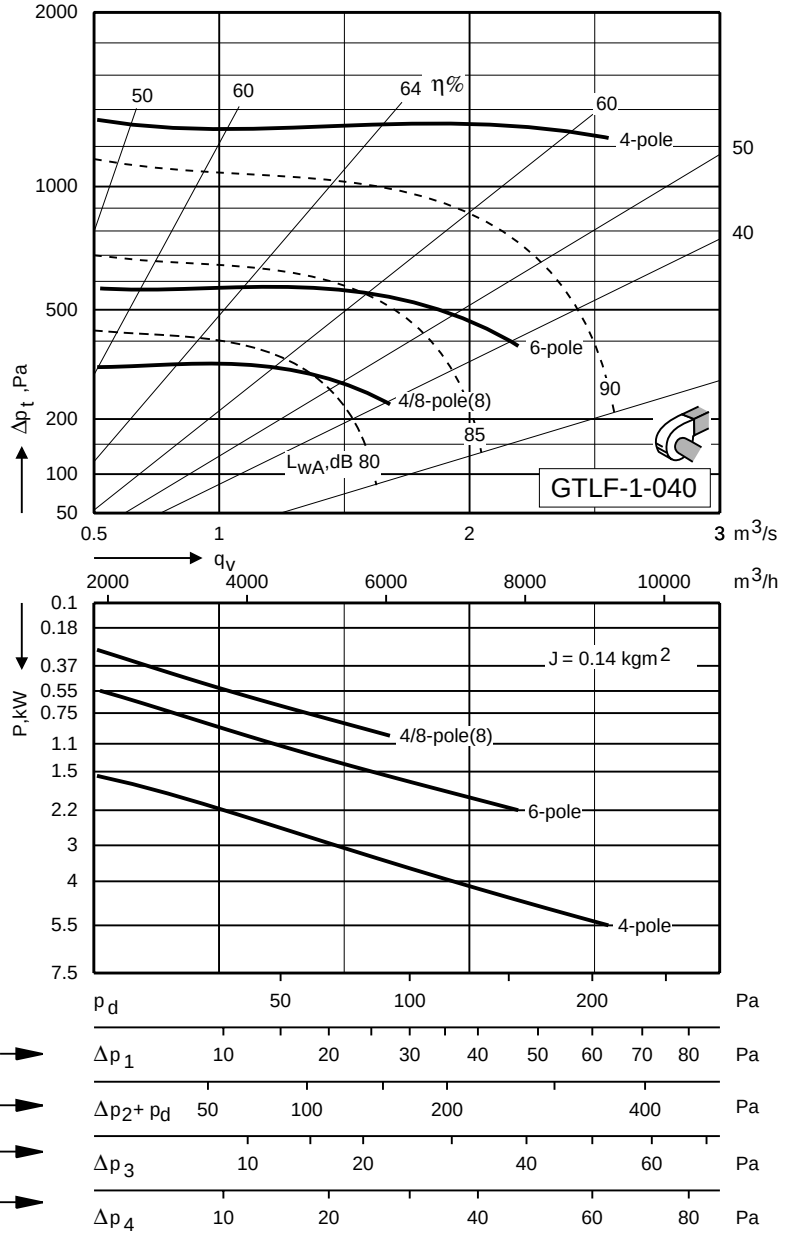

Acoustic Data

A-weighted sound power levels L_{WA} on the outlet side of a fan with the inlet and outlet ducted are specified in the chart. Correction figures can be read from the adjacent table. The following formula is used for breaking down the sound each octave band and each sound path:

$$L_{wokt(s)} = L_{WA} + K_{okt(s)}$$

where K_{okt} can be obtained from the table. The following formula can be used for calculating the A-weighted sound power level on each sound path:

$$L_{WA(s)} = L_{WA} + [L_{wA(s)} - L_{WA}]$$

where the correction figure $L_{wA(s)} - L_{wA}$ can be obtained from the table.
The table also includes correction figure $L_{wt(s)} - L_{wA(s)}$ that can be used for obtaining the total sound power level on each sound path:

$$L_{wt(s)} = L_{WA(s)} + [L_{wt(s)} - L_{WA(s)}]$$

Sound path (s)	Speed range r/min	Correction Kokt, dB, Octave band, mid-frequency, Hz 63	125	250	500	1 000	2 000	4 000	8 000	$L_{WA(s)} - L_{WA}$ dB	$L_{Wt(s)} - L_{WA(s)}$ dB
To outlet duct (1)	0 – 1010	4	3	-2	-3	-6	-8	-10	-14	0	7,9
	1011 – 1500	5	2	-4	-6	-5	-7	-9	-13	0	7,8
To inlet duct (2)	0 – 1010	5	2	-7	-6	-3	-7	-10	-16	0,4	7,4
	1011 – 1500	6	-1	-10	-8	-3	-6	-10	-14	0,4	7,3
Through the casing (3)	0 – 1010	-8	-6	-4	-4	-6	-10	-17	-24	-1,8	3,8
	1011 – 1500	-8	-7	-8	-10	-7	-8	-17	-25	-3,0	3,0
To fan outlet (open-discharge fan) (4)	0 – 1010	-11	-3	-4	-4	-6	-8	-10	-14	-0,6	3,4
	1011 – 1500	-11	-4	-6	-7	-5	-7	-9	-13	-0,4	2,5

Dimensions and Weights – Motor Data – GTLB-1-040

Dimensions and Weights

Right-hand version with 90° direction of discharge shown

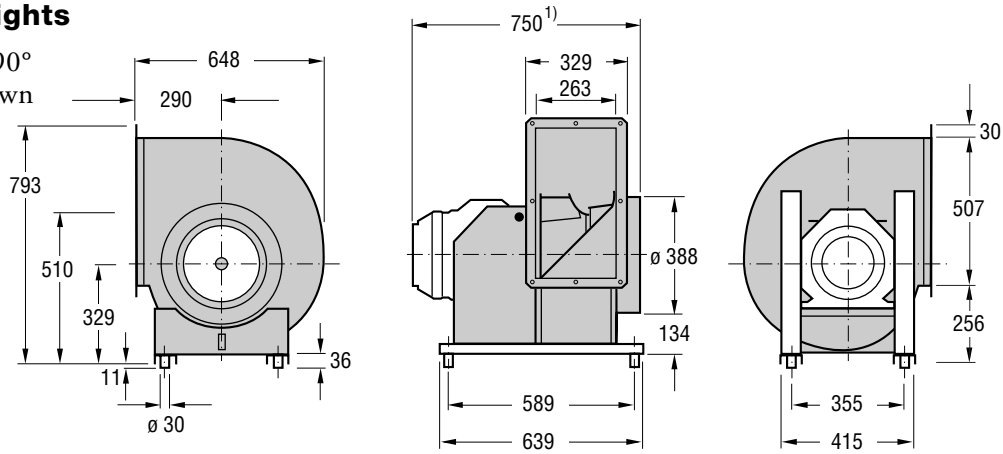

Right-hand version (viewed from drive side)

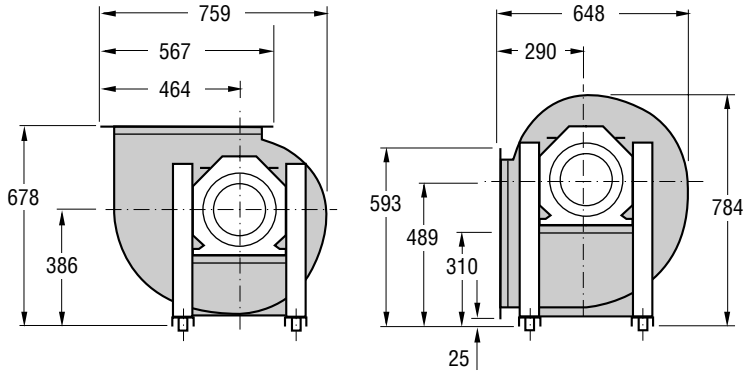

1) With max. motor size

Left-hand version (same dimensions as the right-hand version)

90° 0° 270°

Weight (kg)

GTLB-1-040: 34,2

Outlet flange

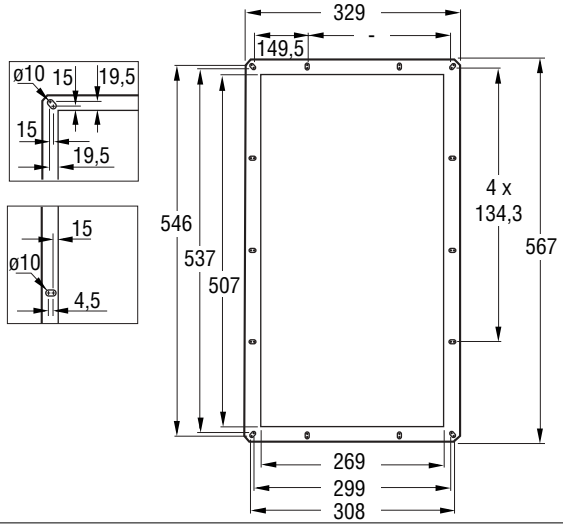

Motor data

Number of poles	Rated output kW	IEC Size	Motor code	Speed	Weight, kg	Hub code	Remark
4	0,55	80A	APAL-4-90055-c-d	1350	9,0	HULB-1-040-c-19-0	Motor code: c, d: see ordering codes
2	4	112M	APAL-2-00400-c-d	2850	25,0	HULB-1-040-c-28-0	page 59
4/6	0,75/0,22	80B	ATAL-4-90075-c-d	1400/955	10,5	HULB-1-040-c-19-0	Hub code: c = 1, right-hand version
4/8	0,55/0,11	80A	ARAL-4-90055-c-d	1410/690	8,5	HULB-1-040-c-19-0	c = 2, left-hand versionrande
2/4	4,5/1	112M	ARAL-2-00450-c-d	2875/1450	32,0	HULB-1-040-c-28-0	

Fan Charts – Acoustic Data – GTLB-1-040

Direct driven, single-inlet, backward-curved blades

Impeller diameter: 400 mm

Only the GTLB is available in the smoke extraction version.

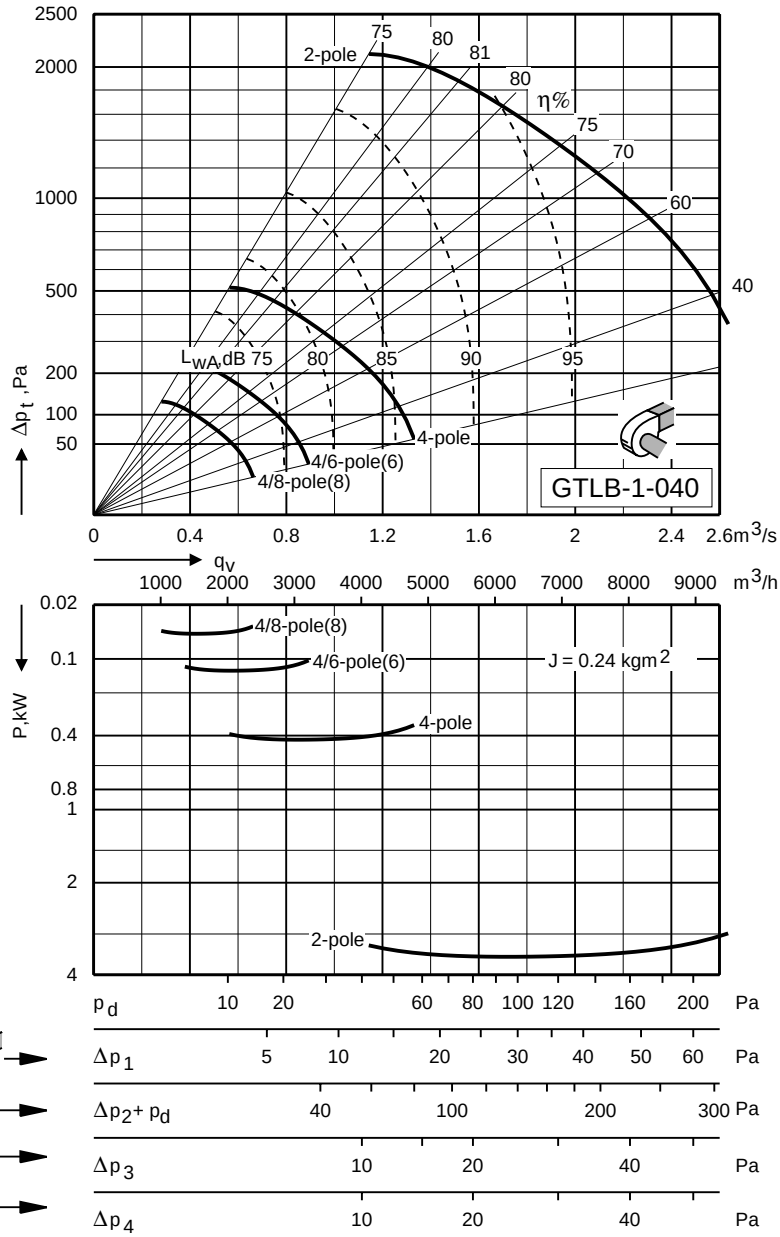

Acoustic Data

A-weighted sound power levels L_{WA} on the outlet side of a fan with the inlet and outlet ducted are specified in the chart. Correction figures can be read from the adjacent table. The following formula is used for breaking down the sound each octave band and each sound path:

$$L_{wokt(s)} = L_{WA} + K_{okt(s)}$$

where K_{okt} can be obtained from the table. The following formula can be used for calculating the A-weighted sound power level on each sound path:

$$L_{WA(s)} = L_{WA} + [L_{wA(s)} - L_{WA}]$$

where the correction figure $L_{wA(s)} - L_{wA}$ can be obtained from the table.
The table also includes correction figure $L_{wt(s)} - L_{wA(s)}$ that can be used for obtaining the total sound power level on each sound path:

$$L_{wt(s)} = L_{WA(s)} + [L_{wt(s)} - L_{WA(s)}]$$

Sound path (s)	Speed range r/min	Correction Kokt, dB, Octave band, mid-frequency, Hz: 63	125	250	500	1 000	2 000	4 000	8 000	$L_{WA(s)} - L_{WA}$ dB	$L_{Wt(s)} - L_{WA(s)}$ dB
To outlet duct (1)	0 – 1928	1	-2	2	-5	-5	-8	-15	-18	0	6,3
	1929 – 3000	-1	-3	-7	-2	-5	-7	-12	-17	0	4,4
To inlet duct (2)	0 – 1928	2	0	-2	-3	-6	-9	-11	-11	-0,3	6,6
	1929 – 3000	-1	-4	-10	-2	-4	-6	-8	-15	1,1	3,3
Through the casing (3)	0 – 1928	-7	-9	-6	-10	-10	-14	-23	-33	-6,2	5,3
	1929 – 3000	-10	-13	-10	-9	-9	-15	-23	-36	-6,0	3,3
To fan outlet (open-discharge fan) (4)	0 – 1928	-11	-7	0	-6	-5	-8	-15	-18	-0,8	3,9
	1929 – 3000	-16	-8	-9	-3	-5	-7	-12	-17	-0,3	1,8

Dimensions and Weights – Motor Data – GTLF-1-045

Dimensions and Weights

Right-hand version with 90° direction of discharge shown

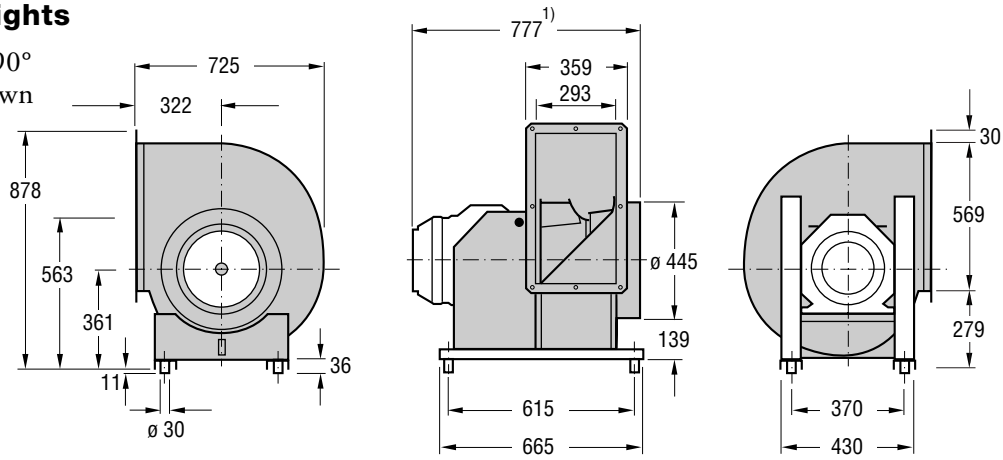

Right-hand version (viewed from drive side)

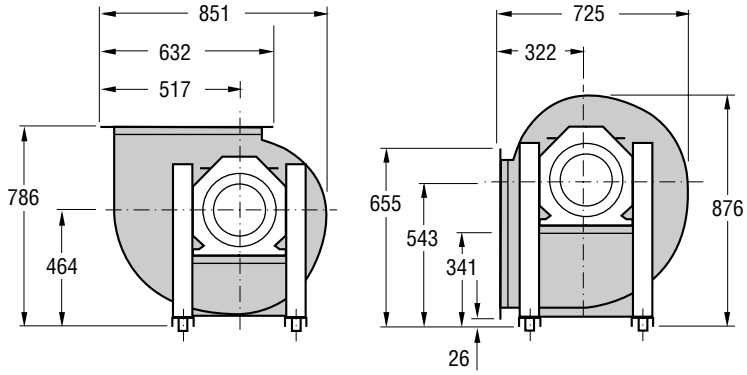

1) With max. motor size

Left-hand version (same dimensions as the right-hand version)

90° **0°** **270°**

Weight (kg)

GTLF-1-045: 38,3

Outlet flange

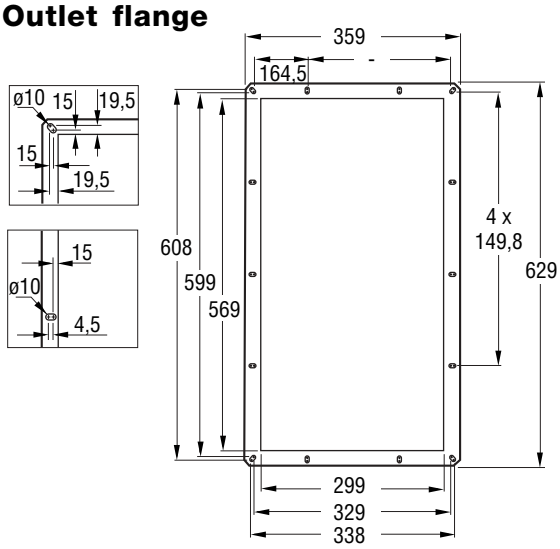

Motor data

Number of poles	Rated output kW	IEC Size	Motor code	Speed	Weight, kg	Hub code	Remark
6 8	4 1,5	132MA 112M	APAL-6-00400-c-d APAL-8-00150-c-d	955 695	46,0 4,5	HULF-1-045-c-38-0 HULF-1-045-c-28-0	Motor code: c, d: see ordering codes page 59 Hub code: c = 1, right-hand version c = 2, left-hand versionrande

Fan Charts – Acoustic Data – GTLF-1-045

Direct driven, single-inlet, forward-curved blades

Impeller diameter: 450 mm

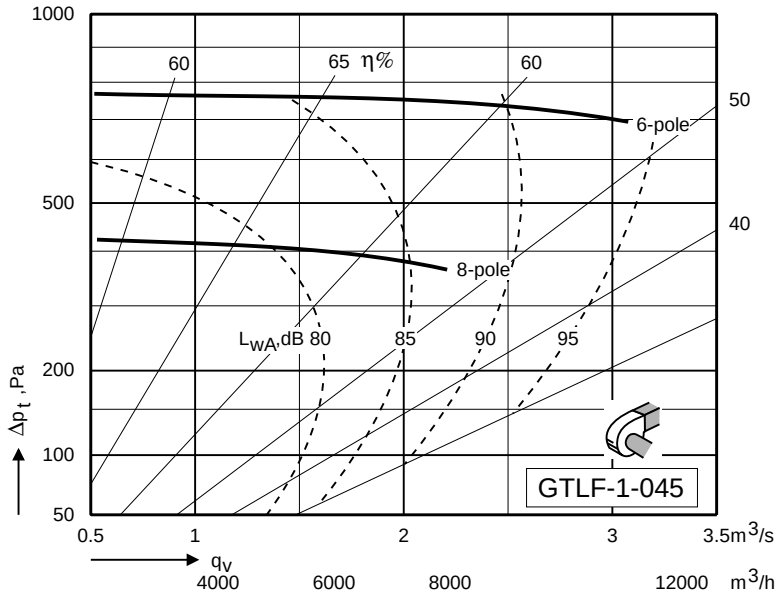

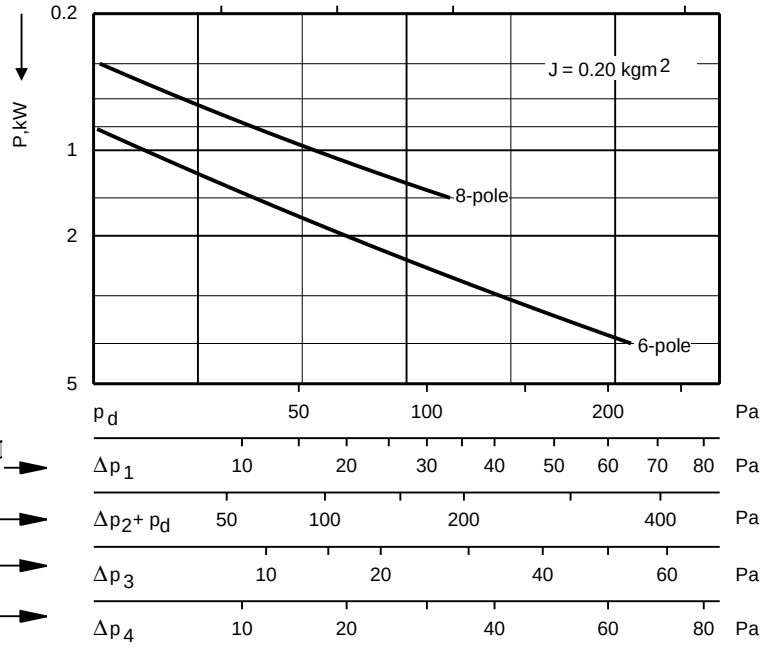

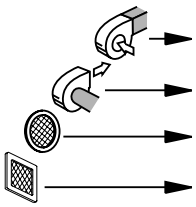

Acoustic Data

A-weighted sound power levels L_{WA} on the outlet side of a fan with the inlet and outlet ducted are specified in the chart. Correction figures can be read from the adjacent table. The following formula is used for breaking down the sound each octave band and each sound path:

$$L_{wokt(s)} = L_{WA} + K_{okt(s)}$$

where K_{okt} can be obtained from the table. The following formula can be used for calculating the A-weighted sound power level on each sound path:

$$L_{WA(s)} = L_{WA} + [L_{wA(s)} - L_{WA}]$$

where the correction figure $L_{wA(s)} - L_{wA}$ can be obtained from the table.
The table also includes correction figure $L_{wt(s)} - L_{wA(s)}$ that can be used for obtaining the total sound power level on each sound path:

$$L_{wt(s)} = L_{WA(s)} + [L_{wt(s)} - L_{WA(s)}]$$

Sound path (s)	Speed range r/min	Correction Kokt, dB, Octave band, mid-frequency, Hz 63	125	250	500	1 000	2 000	4 000	8 000	$L_{WA(s)} - L_{WA}$ dB	$L_{Wt(s)} - L_{WA(s)}$ dB
To outlet duct (1)	0 – 1010	1	3	-2	-3	-6	-7	-11	-15	0	6,9
	1011 – 1500	1	2	-4	-5	-5	-7	-10	-14	0	6,2
To inlet duct (2)	0 – 1010	3	1	-5	-5	-2	-7	-10	-15	1,0	7,9
	1011 – 1500	3	-2	-8	-6	-2	-6	-9	-13	1,2	7,3
Through the casing (3)	0 – 1010	-11	-6	-5	-4	-6	-9	-18	-25	-1,7	3,3
	1011 – 1500	-12	-9	-8	-9	-7	-8	-18	-26	-2,9	2,2
To fan outlet (open-discharge fan) (4)	0 – 1010	-14	-2	-4	-3	-6	-7	-11	-15	-0,2	3,5
	1011 – 1500	-15	-3	-6	-5	-5	-7	-10	-14	-0,3	2,7

Dimensions and Weights – Motor Data – GTLB-1-045

Dimensions and Weights

Right-hand version with 90° direction of discharge shown

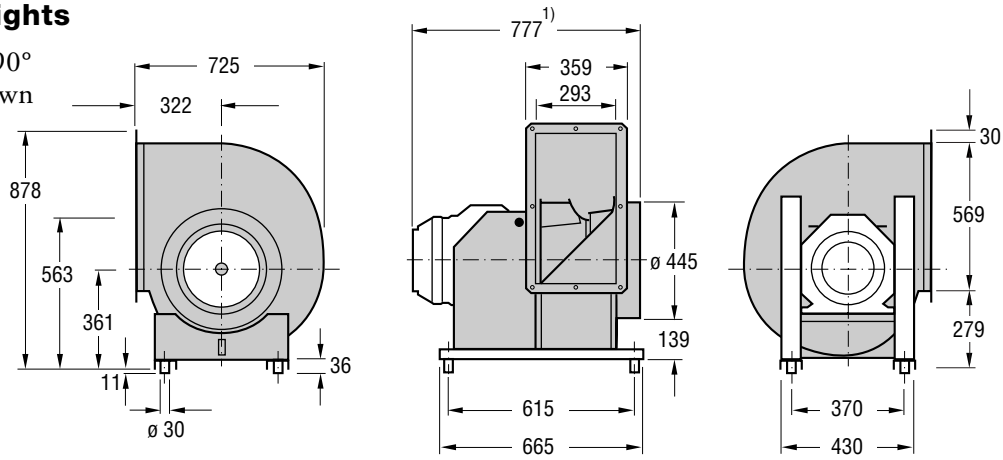

Right-hand version (viewed from drive side)

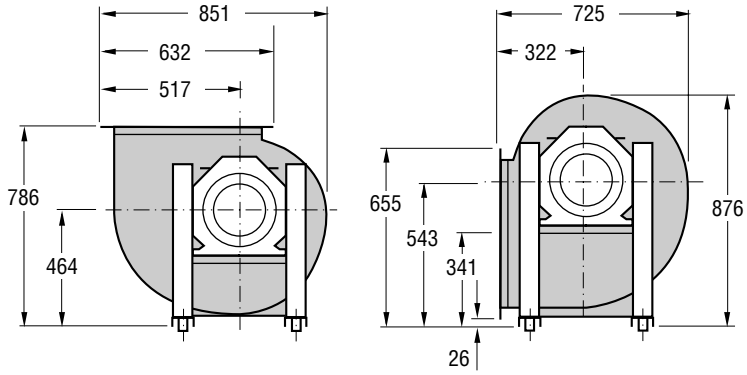

1) With max. motor size

Left-hand version (same dimensions as the right-hand version)

90° **0°** **270°**

Weight (kg)

GTLB-1-045: 41,2

Outlet flange

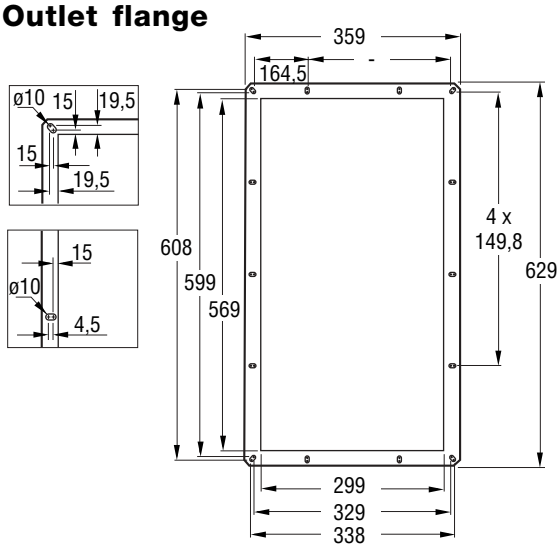

Motor data

Number of poles	Rated output kW	IEC Size	Motor code	Speed	Weight, kg	Hub code	Remark
4	1,1	90S	APAL-4-90110-c-d	1410	13,0	HULB-1-045-c-24-0	Motor code: c, d: see ordering codes
6	0,37	80A	APAL-6-90037-c-d	915	9,0	HULB-1-045-c-19-0	page 59
4/6	1/0,3	90S	ATAL-4-90100-c-d	1400/940	13,0	HULB-1-045-c-24-0	Hub code: c = 1, right-hand version
4/8	1,1/0,26	90S	ARAL-4-90110-c-d	1410/700	13,0	HULB-1-045-c-24-0	c = 2, left-hand versionrande

Fan Charts – Acoustic Data – GTLB-1-045

Direct driven, single-inlet, backward-curved blades

Impeller diameter: 450 mm

Only the GTLB is available in the smoke extraction version.

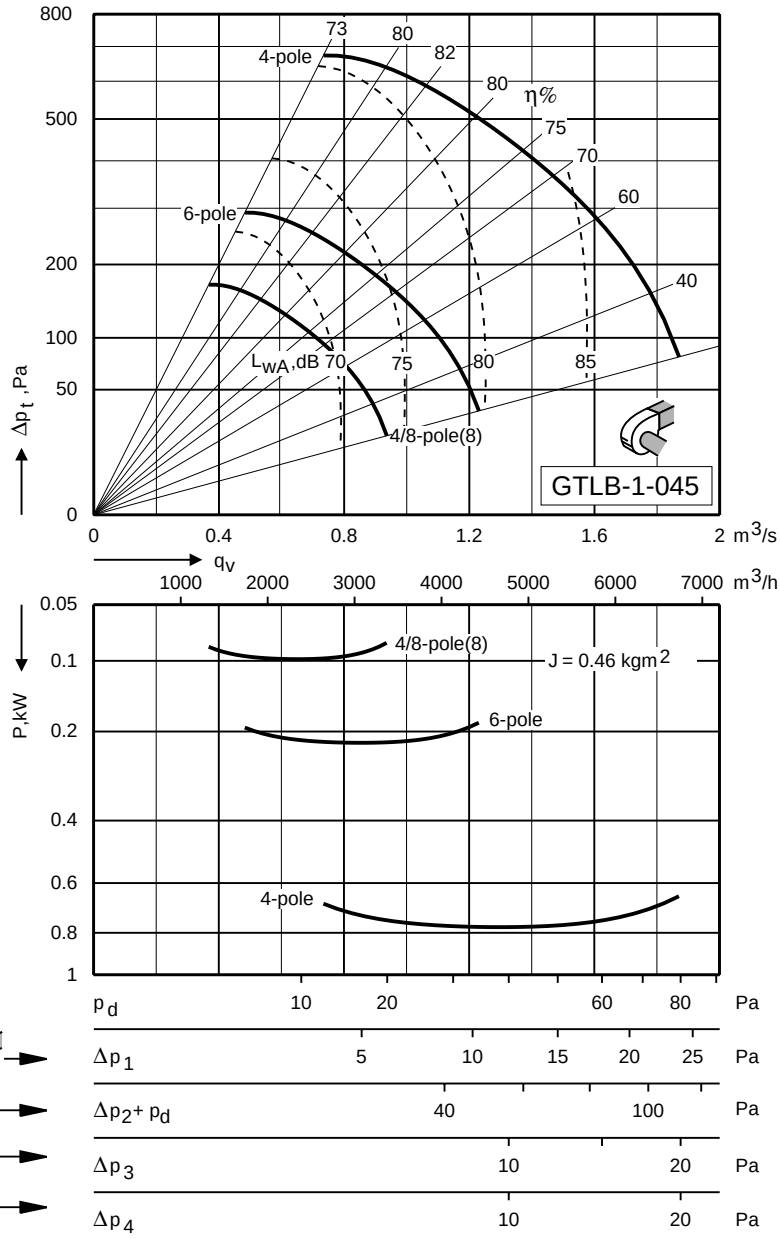

Acoustic Data

A-weighted sound power levels L_{WA} on the outlet side of a fan with the inlet and outlet ducted are specified in the chart. Correction figures can be read from the adjacent table. The following formula is used for breaking down the sound each octave band and each sound path:

$$L_{wokt(s)} = L_{WA} + K_{okt(s)}$$

where K_{okt} can be obtained from the table. The following formula can be used for calculating the A-weighted sound power level on each sound path:

$$L_{WA(s)} = L_{WA} + [L_{wA(s)} - L_{WA}]$$

where the correction figure $L_{wA(s)} - L_{wA}$ can be obtained from the table.
The table also includes correction figure $L_{wt(s)} - L_{wA(s)}$ that can be used for obtaining the total sound power level on each sound path:

$$L_{wt(s)} = L_{WA(s)} + [L_{wt(s)} - L_{WA(s)}]$$

Sound path (s)	Speed range r/min	Correction Kokt, dB, Octave band, mid-frequency, Hz 63	125	250	500	1 000	2 000	4 000	8 000	$L_{WA(s)} - L_{WA}$ dB	$L_{Wt(s)} - L_{WA(s)}$ dB
To outlet duct (1)	0 – 964	0	5	2	-3	-6	-9	-14	-18	0	8,2
	965 – 1500	-2	-1	3	-3	-6	-9	-14	-17	0	6,4
To inlet duct (2)	0 – 964	4	3	0	-3	-4	-9	-12	-14	0,4	7,8
	965 – 1500	2	-1	0	-3	-5	-8	-10	-13	0,3	6,2
Through the casing (3)	0 – 964	-8	-5	-6	-8	-11	-15	-22	-33	-6,1	6,1
	965 – 1500	-10	-8	-6	-10	-12	-16	-25	-36	-7,3	5,8
To fan outlet (open-discharge fan) (4)	0 – 964	-9	0	0	-3	-6	-9	-14	-18	-0,6	5,5
	965 – 1500	-13	-6	1	-3	-6	-9	-14	-17	-0,5	4,5

Dimensions and Weights – Motor Data – GTLF-1-050

Dimensions and Weights

Right-hand version with 90° direction of discharge shown

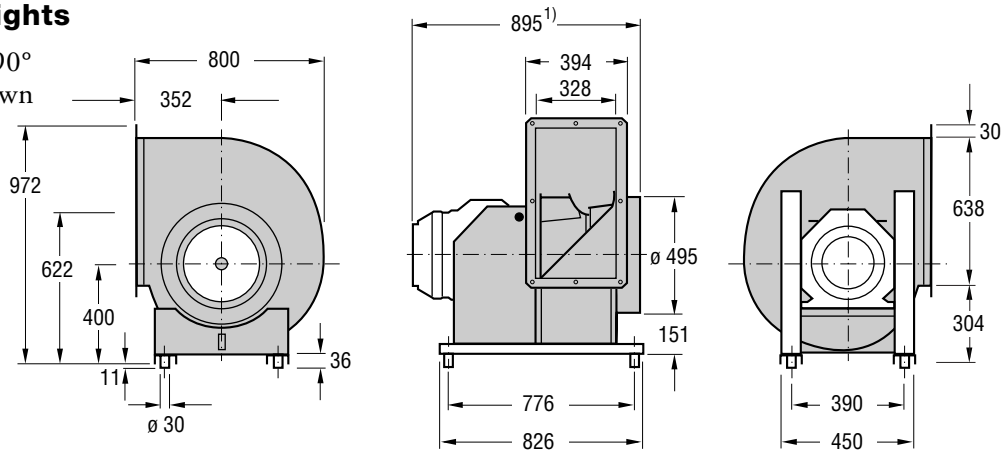

Right-hand version (viewed from drive side)

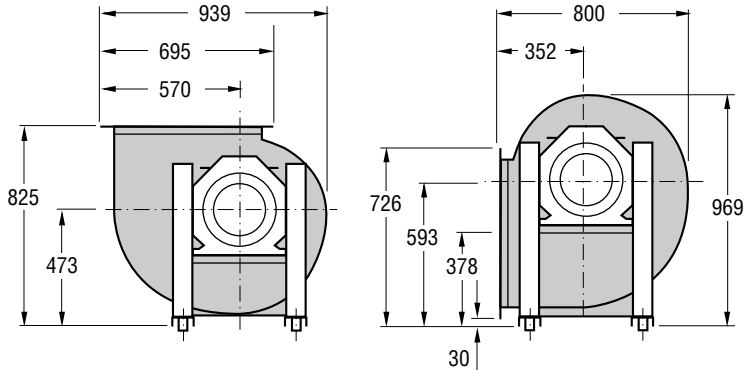

1) With max. motor size

Left-hand version (same dimensions as the right-hand version)

90° **0°** **270°**

Weight (kg)

GTLF-1-050: 47,2

Outlet flange

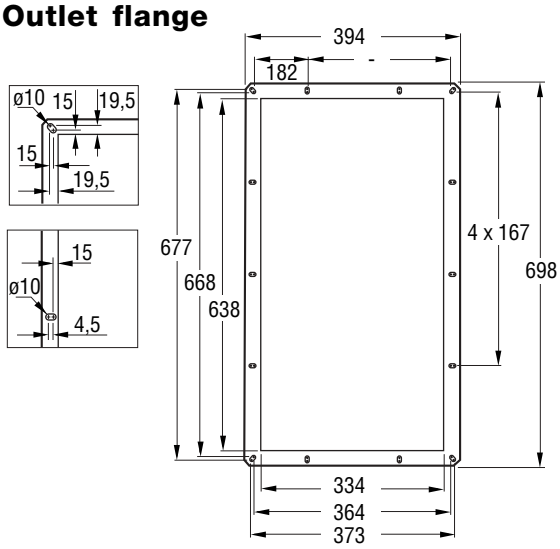

Motor data

Number of poles	Rated output kW	IEC Size	Motor code	Speed	Weight, kg	Hub code	Remark
6 8	5,5 3	132MB 132M	APAL-6-00550-c-d APAL-8-00300-c-d	970 720	54,0 53,0	HULF-1-050-c-38-0 HULF-1-050-c-38-0	Motor code: c, d: see ordering codes page 59 Hub code: c = 1, right-hand version c = 2, left-hand versionrande

Fan Charts – Acoustic Data – GTLF-1-050

Direct driven, single-inlet, forward-curved blades

Impeller diameter: 500 mm

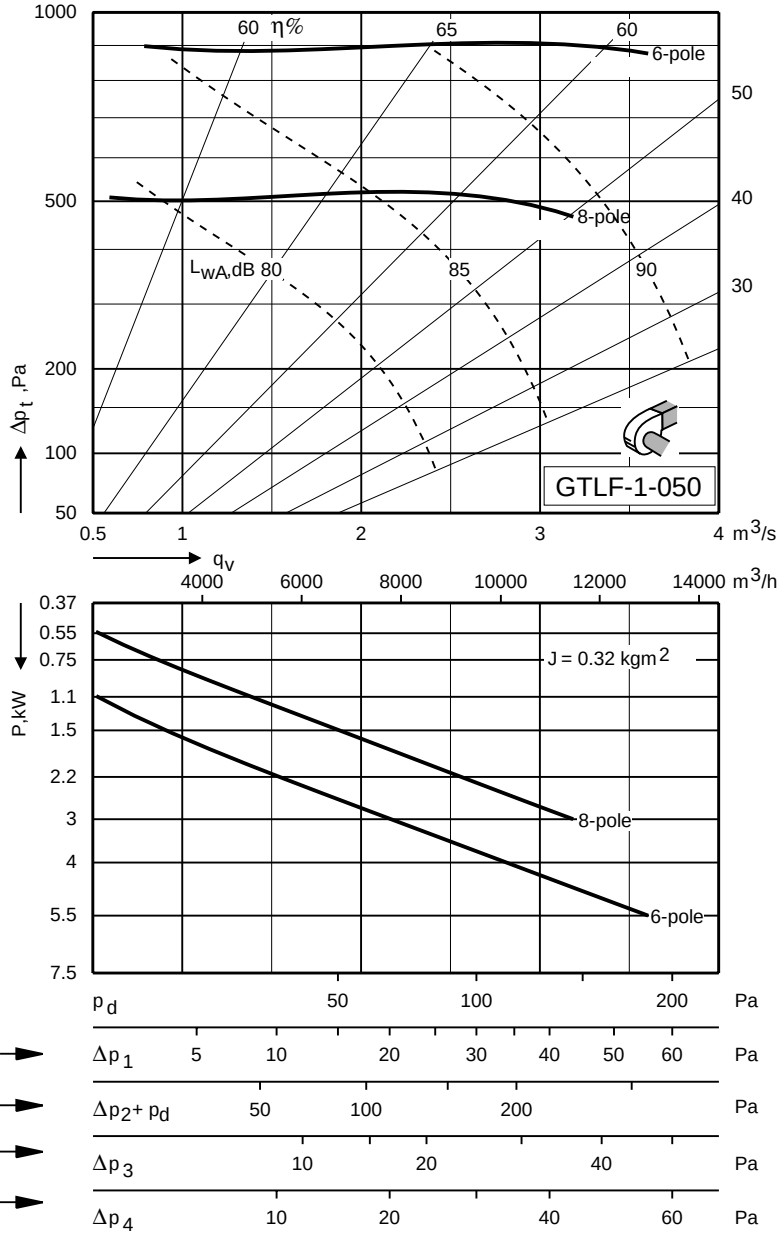

Acoustic Data

A-weighted sound power levels L_{WA} on the outlet side of a fan with the inlet and outlet ducted are specified in the chart. Correction figures can be read from the adjacent table. The following formula is used for breaking down the sound each octave band and each sound path:

$$L_{wokt(s)} = L_{WA} + K_{okt(s)}$$

where K_{okt} can be obtained from the table. The following formula can be used for calculating the A-weighted sound power level on each sound path:

$$L_{WA(s)} = L_{WA} + [L_{wA(s)} - L_{WA}]$$

where the correction figure $L_{wA(s)} - L_{wA}$ can be obtained from the table.
The table also includes correction figure $L_{wt(s)} - L_{wA(s)}$ that can be used for obtaining the total sound power level on each sound path:

$$L_{wt(s)} = L_{WA(s)} + [L_{wt(s)} - L_{WA(s)}]$$

Sound path (s)	Speed range r/min	Correction Kokt, dB – Octave band, mid-frequency, Hz 63	125	250	500	1 000	2 000	4 000	8 000	$L_{WA(s)} - L_{WA}$ dB	$L_{Wt(s)} - L_{WA(s)}$ dB
To outlet duct (1)	0 – 1000	-2	2	-2	-3	-6	-7	-11	-15	0	5,9
To inlet duct (2)	0 – 1000	1	-2	-3	-4	-2	-7	-9	-15	1,3	7,1
Through the casing (3)	0 – 1000	-14	-7	-5	-4	-6	-9	-18	-25	-1,7	3,0
To fan outlet (open-discharge fan) (4)	0 – 1000	-14	-2	-4	-3	-6	-7	-11	-15	-0,2	3,5

Dimensions and Weights – Motor Data – GTLB-1-050

Dimensions and Weights

Right-hand version with 90° direction of discharge shown

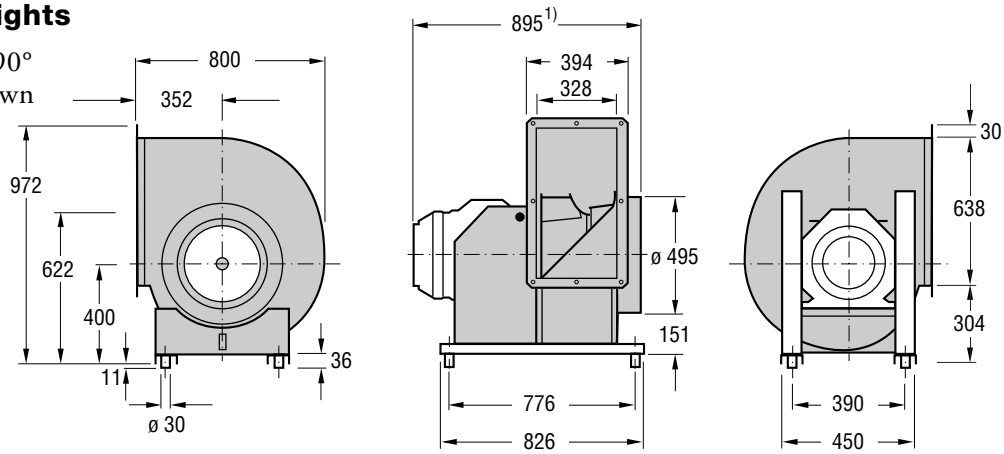

Right-hand version (viewed from drive side)

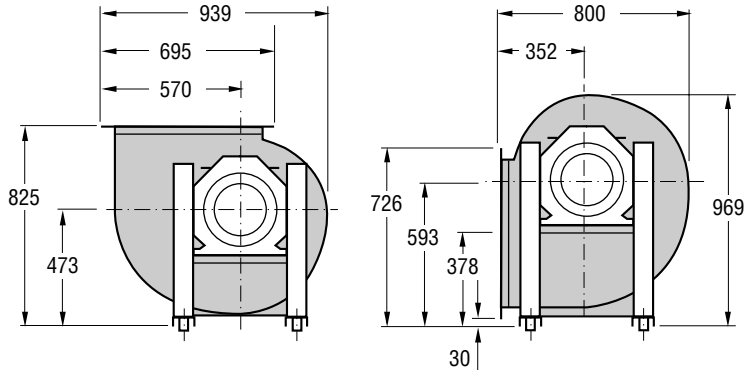

1) With max. motor size

Left-hand version (same dimensions as the right-hand version)

90° 0° 270°

Weight (kg)

GTLB-1-050: 50,7

Outlet flange

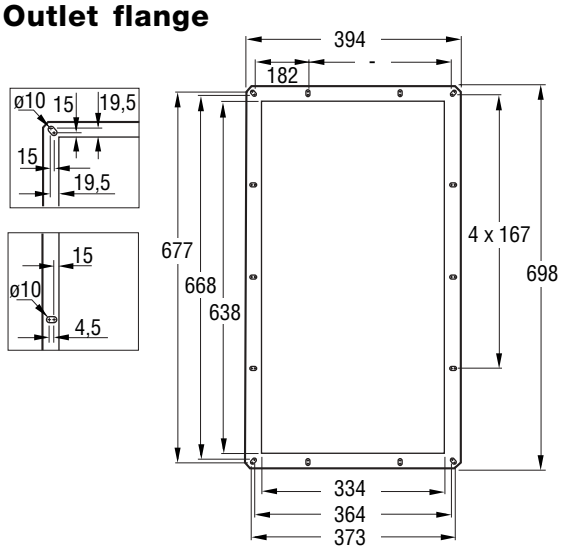

Motor data

Number of poles	Rated output kW	IEC Size	Motor code	Speed	Weight, kg	Hub code	Remark
4	1,5	90L	APAL-4-90150-c-d	1420	16,0	HULB-1-050-c-24-0	Motor code: c, d: see ordering codes
6	0,55	80B	APAL-6-90055-c-d	900	10,0	HULB-1-050-c-19-0	page 59
4/6	1,5/0,45	90L	ATAL-4-90150-c-d	1400/930	16,0	HULB-1-050-c-24-0	Hub code: c = 1, right-hand version
4/8	1,7/0,35	90L	ARAL-4-90170-c-d	1390/700	16,0	HULB-1-050-c-24-0	c = 2, left-hand versionrande

Fan Charts – Acoustic Data – GTLB-1-050

Direct driven, single-inlet, backward-curved blades

Impeller diameter: 500 mm

Only the GTLB is available in the smoke extraction version.

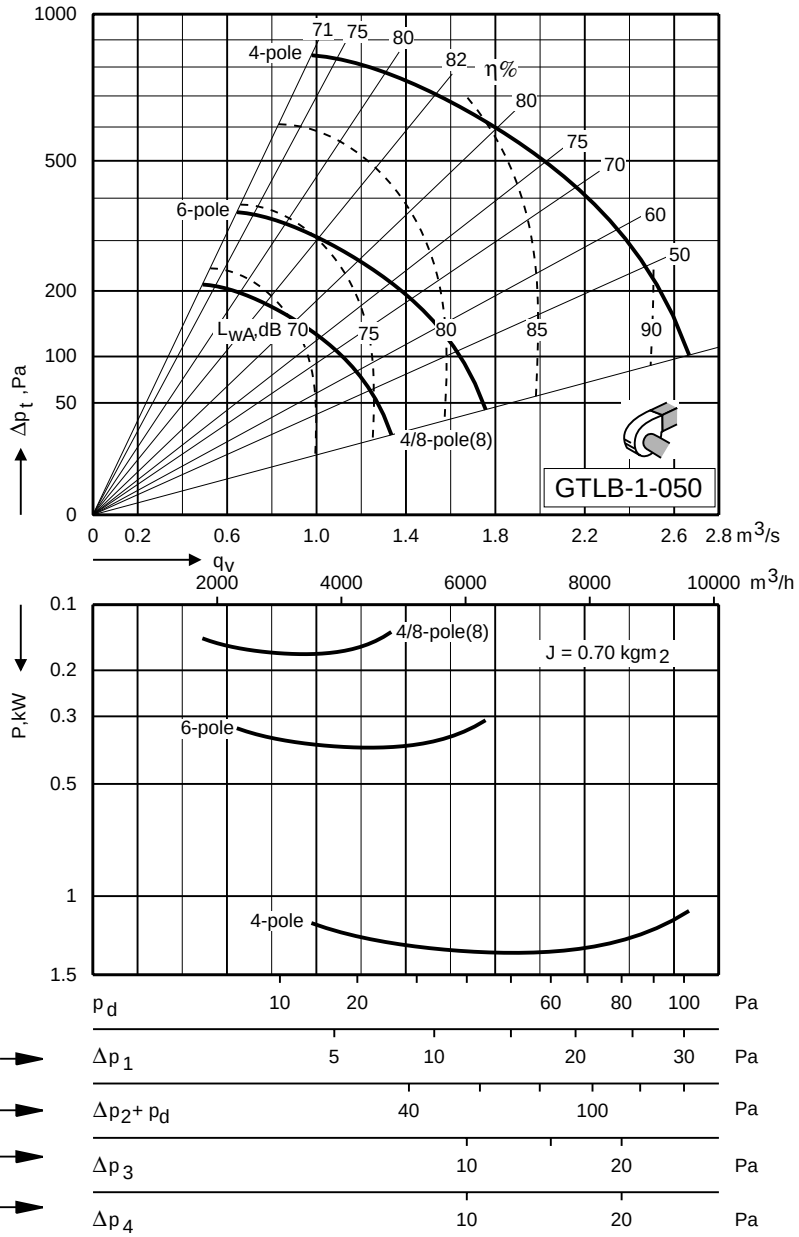

Acoustic Data

A-weighted sound power levels L_{WA} on the outlet side of a fan with the inlet and outlet ducted are specified in the chart. Correction figures can be read from the adjacent table. The following formula is used for breaking down the sound each octave band and each sound path:

$$L_{wokt(s)} = L_{WA} + K_{okt(s)}$$

where K_{okt} can be obtained from the table. The following formula can be used for calculating the A-weighted sound power level on each sound path:

$$L_{WA(s)} = L_{WA} + [L_{wA(s)} - L_{WA}]$$

where the correction figure $L_{wA(s)} - L_{wA}$ can be obtained from the table.
The table also includes correction figure $L_{wt(s)} - L_{wA(s)}$ that can be used for obtaining the total sound power level on each sound path:

$$L_{wt(s)} = L_{WA(s)} + [L_{wt(s)} - L_{WA(s)}]$$

Sound path (s)	Speed range r/min	Correction Kokt, dB, Octave band, mid-frequency, Hz 63	125	250	500	1 000	2 000	4 000	8 000	$L_{WA(s)} - L_{WA}$ dB	$L_{Wt(s)} - L_{WA(s)}$ dB
To outlet duct (1)	0 – 964	-4	5	2	-5	-5	-9	-14	-19	0	7,7
	965 – 1500	-4	0	3	-5	-5	-9	-14	-17	0	6,2
To inlet duct (2)	0 – 964	4	2	-1	-3	-3	-10	-13	-17	0,4	7,4
	965 – 1500	1	-2	1	-4	-4	-8	-11	-16	0,4	5,8
Through the casing (3)	0 – 964	-12	-6	-7	-10	-10	-15	-22	-34	-6,4	5,2
	965 – 1500	-12	-7	-5	-12	-11	-16	-25	-36	-7,2	6,0
To fan outlet (open-discharge fan) (4)	0 – 964	-12	1	1	-5	-5	-9	-14	-19	-0,5	5,8
	965 – 1500	-13	-4	2	-5	-5	-9	-14	-17	-0,4	5,0

Dimensions and Weights – Motor Data – GTLB-1-056

Dimensions and Weights

Right-hand version with 90° direction of discharge shown

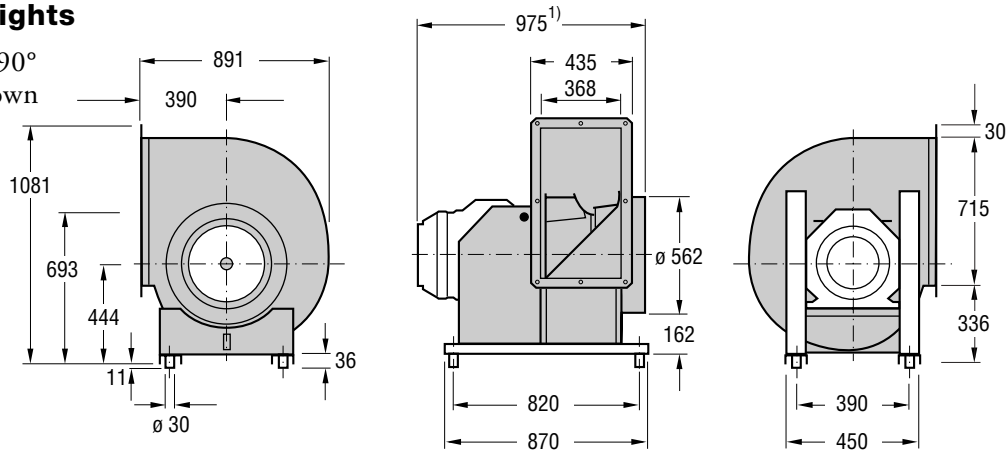

Right-hand version (viewed from drive side)

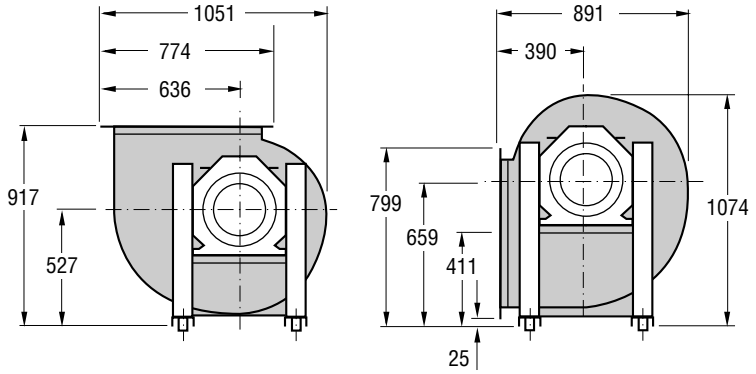

1) With max. motor size

Left-hand version (same dimensions as the right-hand version)

90° **0°** **270°**

Weight (kg)

GTLB-1-056: 67,4

Outlet flange

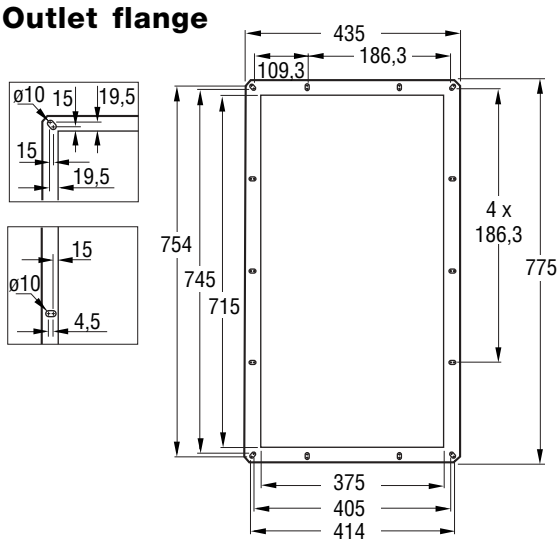

Motor data

Number of poles	Rated output kW	IEC Size	Motor code	Speed	Weight, kg	Hub code	Remark
4	3	100LB	APAL-4-90300-c-d	1430	24,0	HULB-1-056-c-28-0	Motor code: c, d: see ordering codes page 59
6	1,1	90L	APAL-6-90110-c-d	930	16,0	HULB-1-056-c-24-0	Hub code: c = 1, right-hand version
8	0,37	90S	APAL-8-90037-c-d	700	13,0	HULB-1-056-c-24-0	c = 2, left-hand versionrande
4/6	3/1	112M	ATAL-4-00300-c-d	1445/975	33,0	HULB-1-056-c-28-0	
4/8	3,5/0,7	112M	ARAL-4-00350-c-d	1430/720	32,0	HULB-1-056-c-28-0	

Fan Charts – Acoustic Data – GTLB-1-056

Direct driven, single-inlet, backward-curved blades

Impeller diameter: 560 mm

Only the GTLB is available in the smoke extraction version.

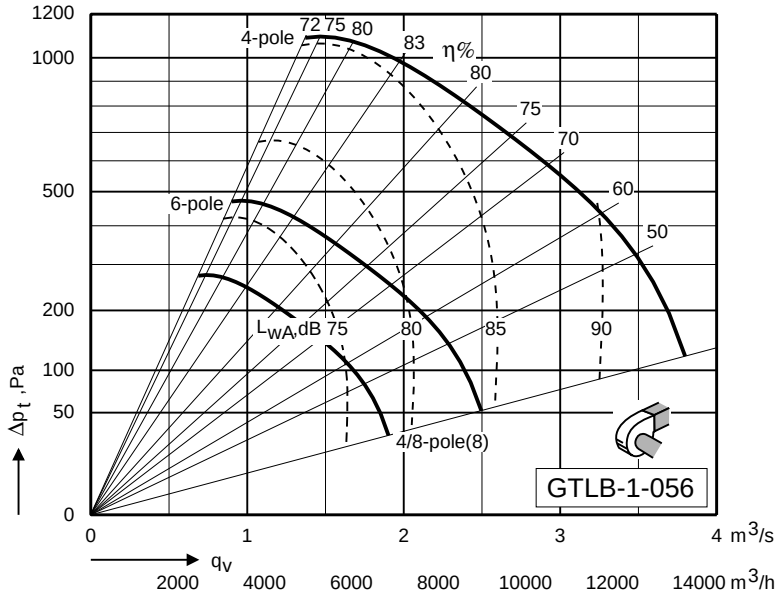

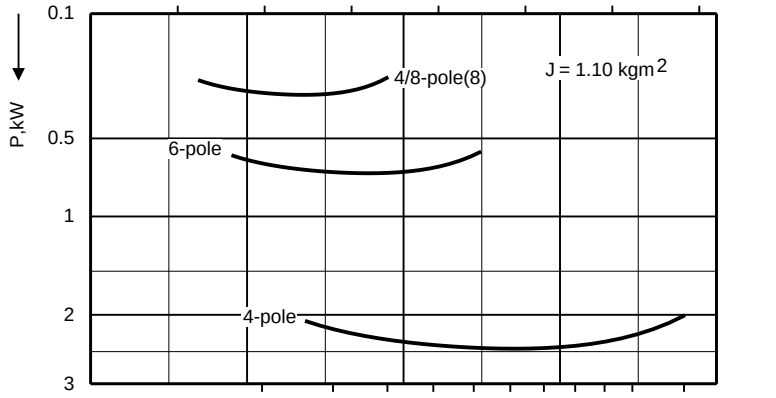

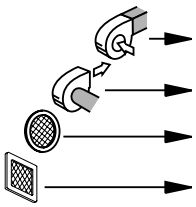

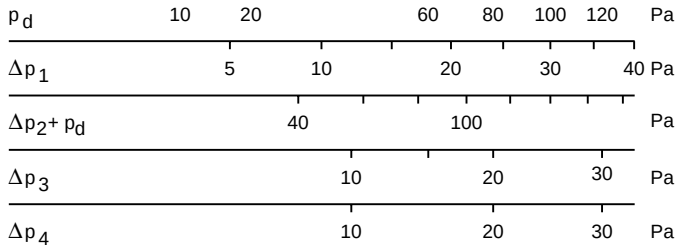

Acoustic Data

A-weighted sound power levels L_{WA} on the outlet side of a fan with the inlet and outlet ducted are specified in the chart. Correction figures can be read from the adjacent table. The following formula is used for breaking down the sound each octave band and each sound path:

$$L_{wokt(s)} = L_{WA} + K_{okt(s)}$$

where K_{okt} can be obtained from the table. The following formula can be used for calculating the A-weighted sound power level on each sound path:

$$L_{WA(s)} = L_{WA} + [L_{wA(s)} - L_{WA}]$$

where the correction figure $L_{wA(s)} - L_{wA}$ can be obtained from the table.
The table also includes correction figure $L_{wt(s)} - L_{wA(s)}$ that can be used for obtaining the total sound power level on each sound path:

$$L_{wt(s)} = L_{WA(s)} + [L_{wt(s)} - L_{WA(s)}]$$

Sound path (s)	Speed range r/min	Correction Kokt, dB Octave band, mid-frequency, Hz 63	125	250	500	1 000	2 000	4 000	8 000	$L_{WA(s)} - L_{WA}$ dB	$L_{Wt(s)} - L_{WA(s)}$ dB
To outlet duct (1)	0 – 964	-5	4	1	-5	-4	-9	-14	-18	0	7,0
	965 – 1500	-5	-2	2	-5	-4	-9	-14	-17	0	5,4
To inlet duct (2)	0 – 964	0	3	0	-5	-3	-8	-12	-15	0,6	6,4
	965 – 1500	-2	-3	1	-6	-3	-8	-12	-15	0,4	4,9
Through the casing (3)	0 – 964	-13	-5	-7	-10	-9	-15	-22	-33	-5,9	5,1
	965 – 1500	-13	-9	-5	-12	-10	-16	-25	-36	-6,8	5,1
To fan outlet (open-discharge fan) (4)	0 – 964	-13	0	0	-5	-4	-9	-14	-18	-0,3	5,0
	965 – 1500	-14	-6	1	-5	-4	-9	-14	-17	-0,2	4,1

Dimensions and Weights – Motor Data – GTLB-1-063

Dimensions and Weights

Right-hand version with 90° direction of discharge shown

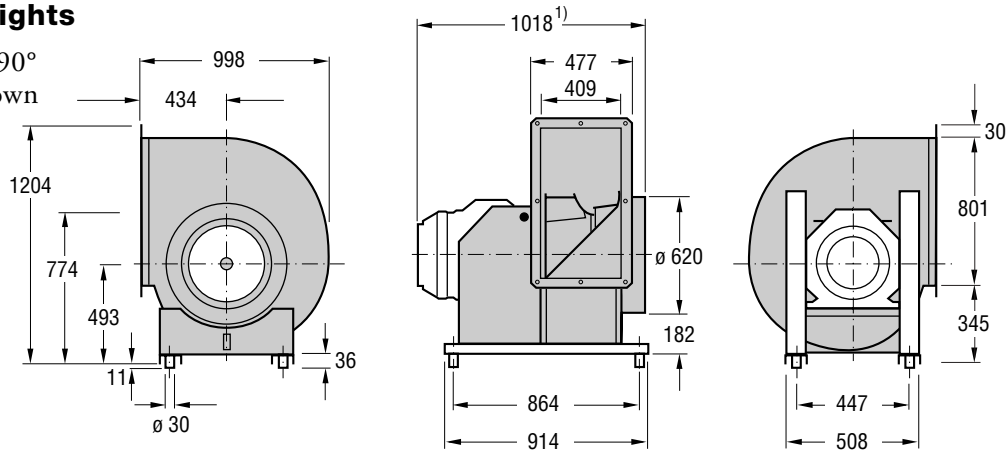

Right-hand version (viewed from drive side)

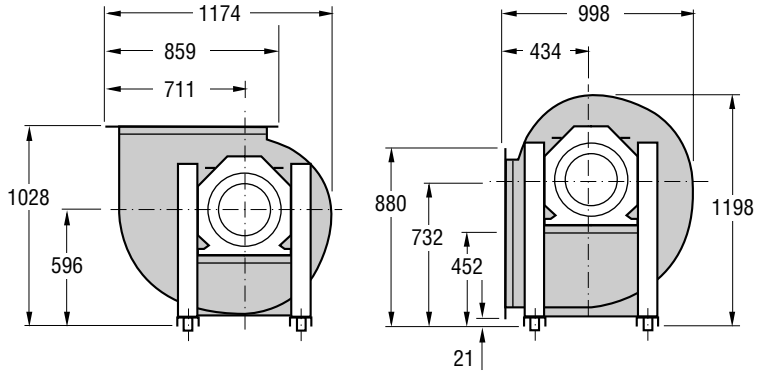

1) With max. motor size

Left-hand version (same dimensions as the right-hand version)

90° **0°** **270°**

Weight (kg)

GTLB-1-063: 91,9

Outlet flange

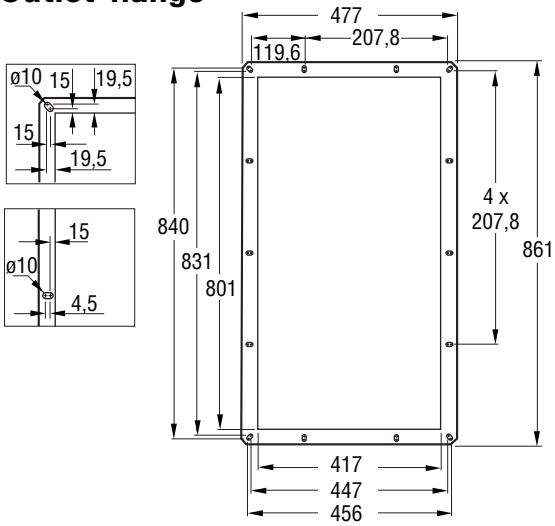

Motor data

Number of poles	Rated output kW	IEC Size	Motor code	Speed	Weight, kg	Hub code	Remark
4	5,5	132S	APAL-4-00550-c-d	1450	40,0	HULB-1-063-c-38-0	Motor code: c, d: see ordering codes
6	2,2	112M	APAL-6-00220-c-d	940	27,0	HULB-1-063-c-28-0	page 59
8	0,75	100LA	APAL-8-90075-c-d	700	20,0	HULB-1-063-c-28-0	Hub code: c = 1, right-hand version
4/6	6/2	132M	ATAL-4-00600-c-d	1460/980	59,0	HULB-1-063-c-38-0	c = 2, left-hand versionrande
4/8	6,8/1,4	132M	ARAL-4-00680-c-d	1460/730	59,0	HULB-1-063-c-38-0	

Fan Charts – Acoustic Data – GTLB-1-063

Direct driven, single-inlet, backward-curved blades

Impeller diameter: 630 mm

Only the GTLB is available in the smoke extraction version.

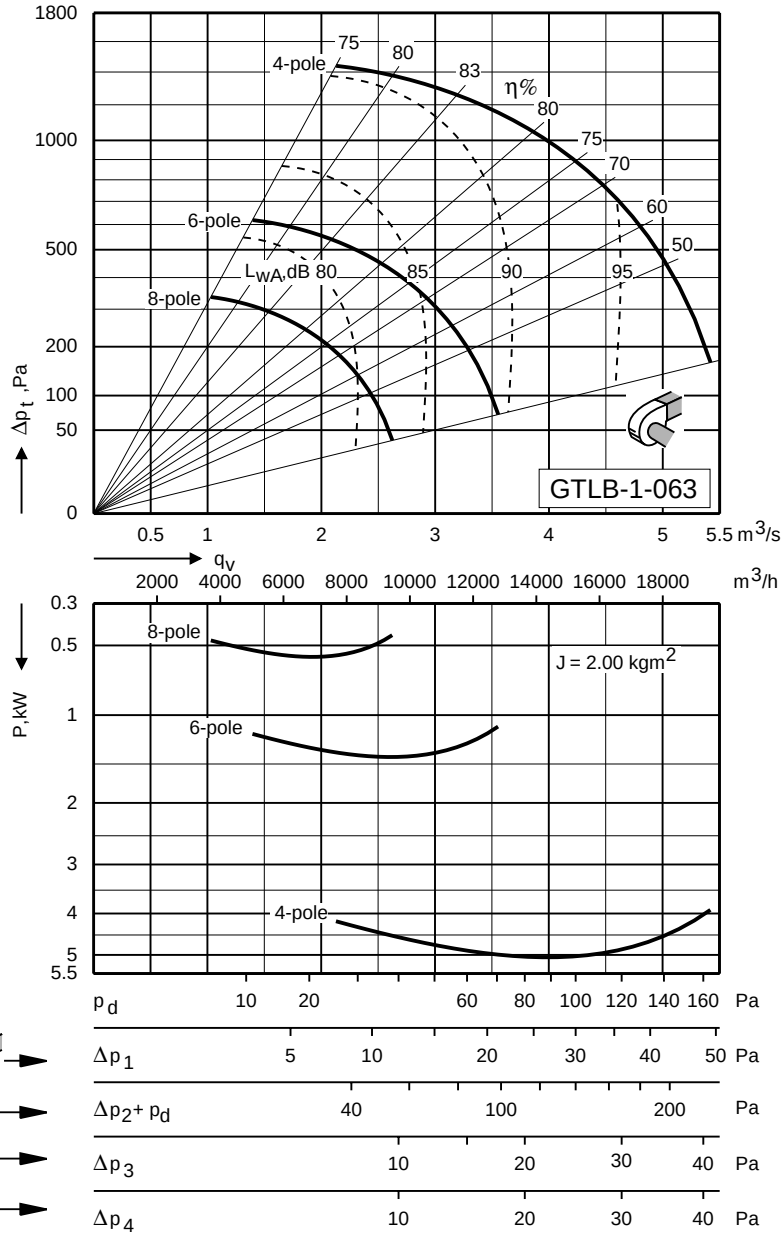

Acoustic Data

A-weighted sound power levels L_{WA} on the outlet side of a fan with the inlet and outlet ducted are specified in the chart. Correction figures can be read from the adjacent table. The following formula is used for breaking down the sound each octave band and each sound path:

$$L_{wokt(s)} = L_{WA} + K_{okt(s)}$$

where K_{okt} can be obtained from the table. The following formula can be used for calculating the A-weighted sound power level on each sound path:

$$L_{WA(s)} = L_{WA} + [L_{wA(s)} - L_{WA}]$$

where the correction figure $L_{wA(s)} - L_{wA}$ can be obtained from the table.
The table also includes correction figure $L_{wt(s)} - L_{wA(s)}$ that can be used for obtaining the total sound power level on each sound path:

$$L_{wt(s)} = L_{WA(s)} + [L_{wt(s)} - L_{WA(s)}]$$

Sound path (s)	Speed range r/min	Correction Kokt, dB, Octave band, mid-frequency, Hz 63	125	250	500	1 000	2 000	4 000	8 000	$L_{WA(s)} - L_{WA}$ dB	$L_{Wt(s)} - L_{WA(s)}$ dB
To outlet duct (1)	0 – 815	-5	3	0	-5	-4	-8	-14	-17	0	6,3
	816 – 1500	-6	-4	1	-5	-4	-8	-14	-17	0	4,5
To inlet duct (2)	0 – 815	-4	3	0	-7	-3	-9	-11	-14	0,3	6,1
	816 – 1500	-5	-4	1	-8	-3	-9	-13	-14	0	4,5
Through the casing (3)	0 – 815	-13	-6	-7	-10	-9	-14	-22	-32	-5,7	4,6
	816 – 1500	-14	-11	-7	-10	-9	-14	-22	-32	-5,8	3,5
To fan outlet (open-discharge fan) (4)	0 – 815	-12	0	-1	-5	-4	-8	-14	-17	-0,2	4,7
	816 – 1500	-13	-7	0	-5	-4	-8	-14	-17	-0,2	3,6

Dimensions and Weights – Motor Data – GTLB-1-071

Dimensions and Weights

Right-hand version with 90° direction of discharge shown

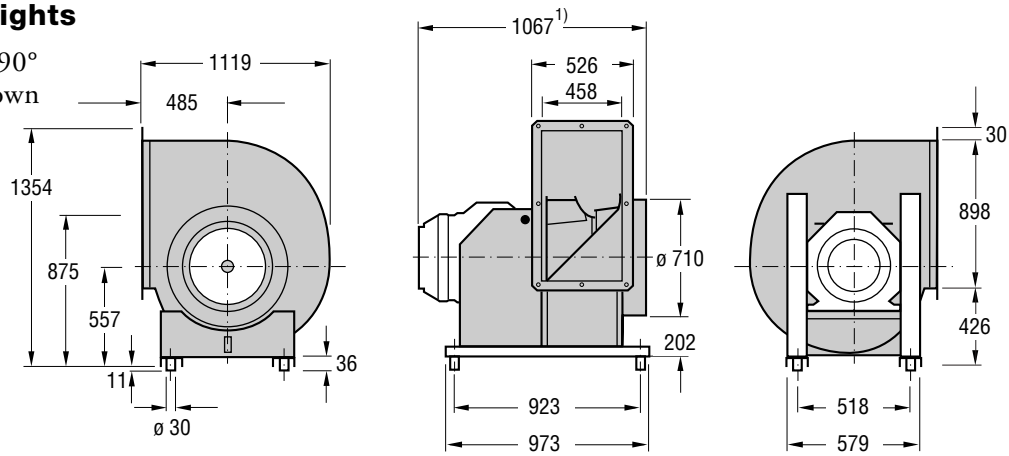

Right-hand version (viewed from drive side)

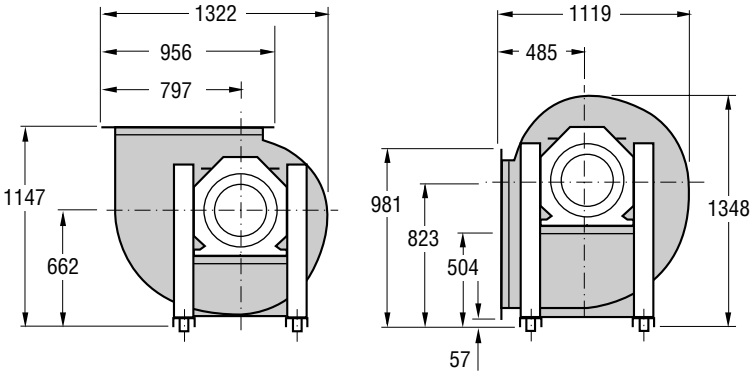

1) With max. motor size

Left-hand version (same dimensions as the right-hand version)

Weight (kg)

GTLB-1-071: 120,5

Outlet flange

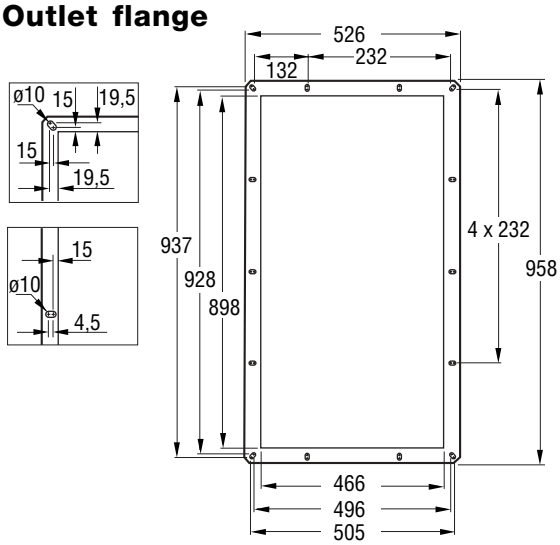

Motor data

Number of poles	Rated output kW	IEC Size	Motor code	Speed	Weight, kg	Hub code	Remark
4	11	160M	APAL-4-01100-c-d	1460	75,0	HULB-1-071-c-42-0	Motor code: c, d: see ordering codes page 59
6	3	132S	APAL-6-00300-c-d	960	39,0	HULB-1-071-c-38-0	Hub code: c = 1, right-hand version
8	1,1	100 LB	APAL-8-90110-c-d	700	23,0	HULB-1-071-c-28-0	c = 2, left-hand versionrande

Fan Charts – Acoustic Data – GTLB-1-071

Direct driven, single-inlet, backward-curved blades

Impeller diameter: 710 mm

Only the GTLB is available in the smoke extraction version.

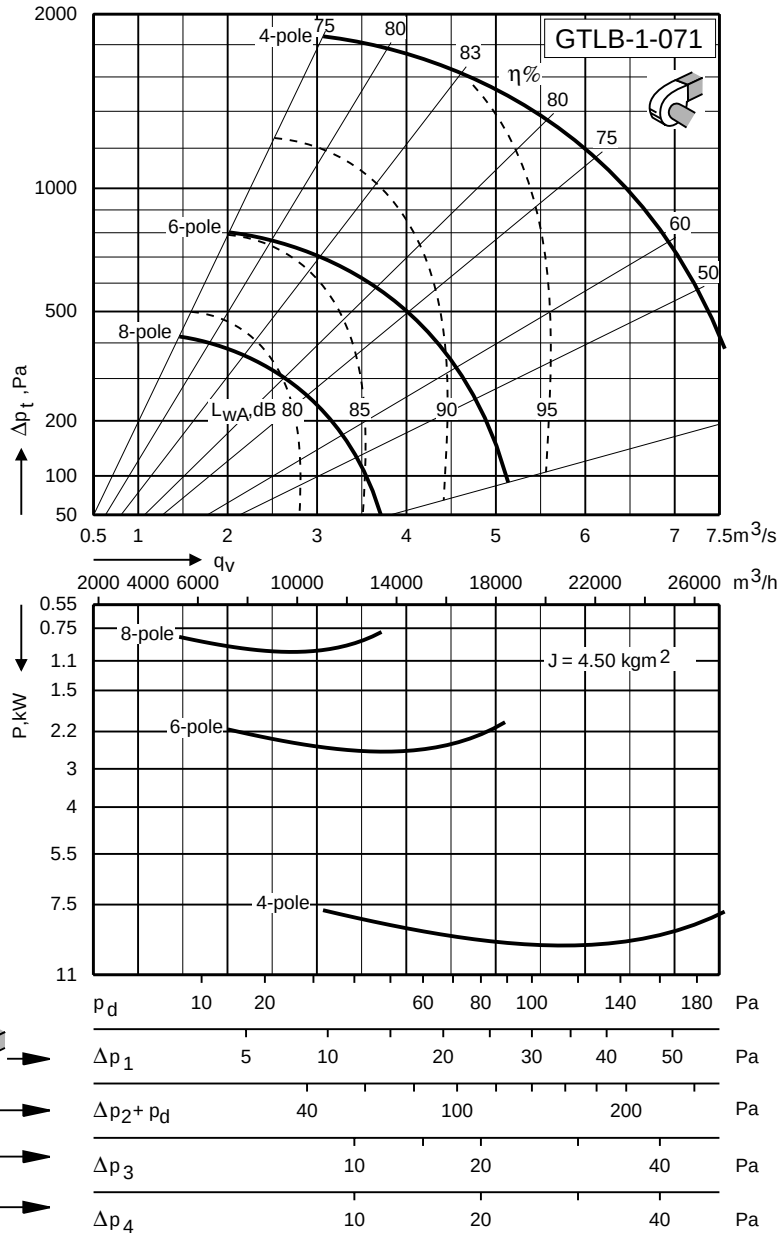

Acoustic Data

A-weighted sound power levels L_{WA} on the outlet side of a fan with the inlet and outlet ducted are specified in the chart. Correction figures can be read from the adjacent table. The following formula is used for breaking down the sound each octave band and each sound path:

$$L_{wokt(s)} = L_{WA} + K_{okt(s)}$$

where K_{okt} can be obtained from the table. The following formula can be used for calculating the A-weighted sound power level on each sound path:

$$L_{WA(s)} = L_{WA} + [L_{wA(s)} - L_{WA}]$$

where the correction figure $L_{wA(s)} - L_{wA}$ can be obtained from the table.
The table also includes correction figure $L_{wt(s)} - L_{wA(s)}$ that can be used for obtaining the total sound power level on each sound path:

$$L_{wt(s)} = L_{WA(s)} + [L_{wt(s)} - L_{WA(s)}]$$

Sound path (s)	Speed range r/min	Correction Kokt, dB, Octave band, mid-frequency, Hz 63	125	250	500	1 000	2 000	4 000	8 000	$L_{WA(s)} - L_{WA}$ dB	$L_{Wt(s)} - L_{WA(s)}$ dB
To outlet duct (1)	0 – 815	-5	2	-1	-4	-4	-9	-14	-20	0	5,6
	816 – 1500	-5	-6	-1	-4	-3	-9	-15	-20	0	3,9
To inlet duct (2)	0 – 815	-3	2	-1	-6	-5	-9	-14	-19	-1,0	6,6
	816 – 1500	-3	-5	0	-7	-5	-10	-14	-19	-1,3	5,3
Through the casing (3)	0 – 815	-13	-6	-7	-9	-9	-15	-22	-35	-5,7	4,7
	816 – 1500	-13	-13	-7	-9	-8	-15	-23	-35	-5,3	3,2
To fan outlet (open-discharge fan) (4)	0 – 815	-11	-1	-2	-4	-4	-9	-14	-20	-0,4	4,3
	816 – 1500	-11	-9	-2	-4	-3	-9	-15	-20	0	2,8

Accessories

Flexible connections, inlet

GTLZ-11-1-ccc-1-0 Normal version, max. +80 °C

GTLZ-12-1-ccc-1-0 Smoke extraction version, max. +400 °C/2 hours

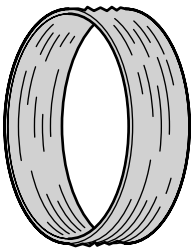

Protective screen, inlet

GTLZ-13-1-ccc-1-0 Protective screen

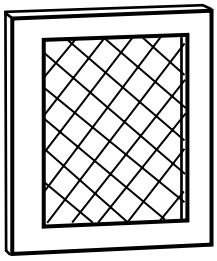

Accessories

Flexible connections, outlet

GTLZ-21-1-ccc-1-0 Normal version, max. +80 °C

GTLZ-22-1-ccc-1-0 Smoke extraction version, max. +400 °C/2 hours

Protective screen, outlet

GTLZ-23-1-ccc-1-0 Protective screen, outlet

Counterflange, outlet

GTLZ-24-1-ccc-1-0 Counterflange

Dimension sketch

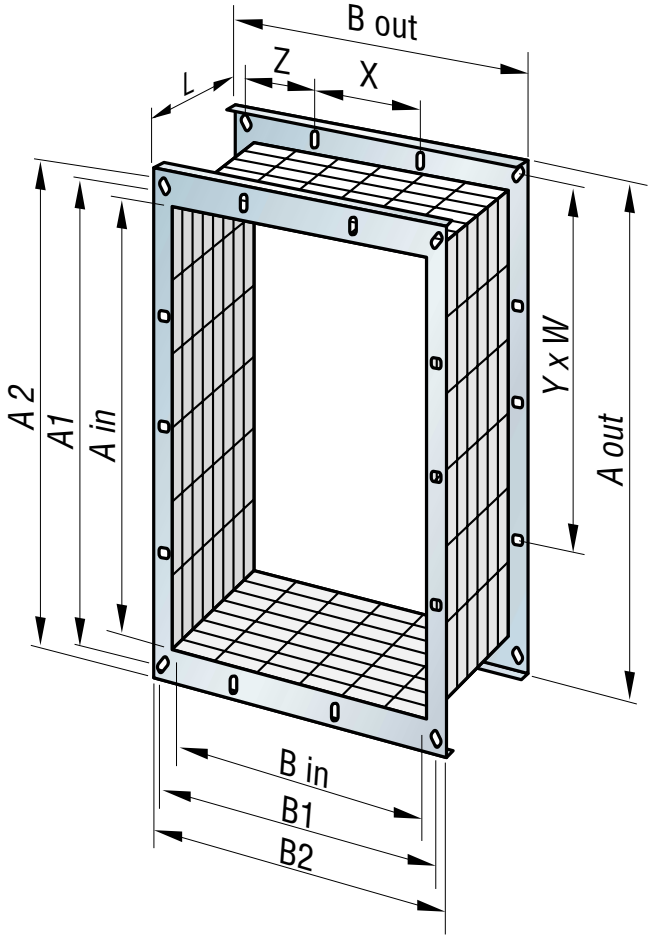

Size	A in	A out	A1	A 2	B in	B out	B1	B2	Z	X	Y	W	n	D	L
020	256	310	280	290	142	196	166	175	–	–	1	140,0	6	10	115
022	288	348	318	328	159	219	189	198	–	–	1	159,0	6	10	115
025	322	382	352	362	179	239	209	219	–	–	2	176,0	6	10	115
028	361	421	391	400	197	257	227	236	–	–	2	200,5	6	10	115
031	404	465	434	444	217	277	247	257	–	–	2	217,0	6	10	115
035	453	513	483	492	242	302	272	281	136,0	–	2	241,5	6	10	115
040	507	567	537	546	269	329	299	308	149,5	–	4	134,3	12	10	115
045	569	629	599	608	299	359	329	338	164,5	–	4	149,8	12	10	150
050	638	698	668	677	334	394	364	373	182,0	–	4	167,0	12	10	150
056	715	775	745	754	375	435	405	414	109,3	186,3	4	186,3	14	10	150
063	801	861	831	840	417	477	447	456	119,6	207,8	4	207,8	14	10	150
071	898	958	928	937	466	526	496	505	132,0	232,0	4	232,0	14	10	150

Accessories

Inspection cover

GTLZ-32-1-ccc-d-0 Inspection cover
Mounted on the back plate of the fan. Made of galvanised sheet steel.
d = location on fan casing, 0 – 4, see illustration

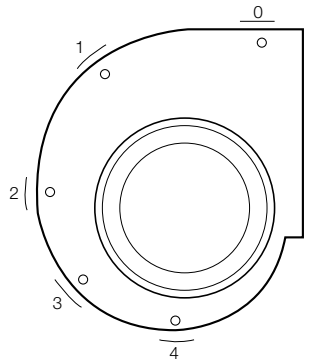

Drain

GTLZ-34-1-ccc-d-0 Drain
Mounted on the back plate of the fan. Made of galvanised sheet steel.
d = location on fan casing, 0 – 4, see illustration

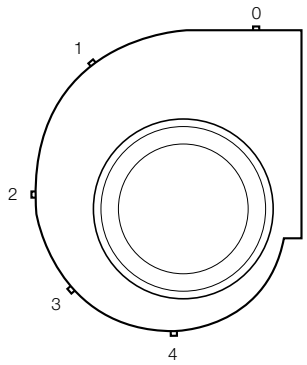

Note! The position of the inspection cover and drain depends on the discharge direction.

Recommended positions are:

GT…-1-bbb-c-d1-00 (0°)	GTLZ-32-1-ccc-4-0 GTLZ-34-1-ccc-2-0
GT…-1-bbb-c-d3-00 (90°)	GTLZ-32-1-ccc-1-0 GTLZ-34-1-ccc-4-0
GT…-1-bbb-c-d7-00 (270°)	GTLZ-32-1-ccc-3-0 GTLZ-34-1-ccc-0-0

Anti-vibration mountings

GTLZ-42-1-ccc-d-0 Anti-vibration mountings, rubber
d = 1 GTLB and GTLF

Accessories

Flow Measurement Device

GTLZ-50-1-ccc-1-0	**Flow measurement device for the GTLF**
GTLZ-51-1-ccc-1-0	**Flow measurement device for the GTLB**

GTLZ-50, 51 Flow measurement devices
The flow measurement device is used for measuring the air flow in type GT fans. This is done by measuring the differential pressure in the device. The flow measurement device should be mounted in the fan inlet. The air flow is calculated as a function of coefficient k and the differential pressure reading Δp_m in the following manner:

$$q = \frac{1}{k} \times \sqrt{\Delta p_m}$$

there q = air flow (m^3/s)
Δp_m = differential pressure reading (Pa)
k = coefficient unique to the fan selected

The air flow that corresponds to the differential pressure reading can most easily be read with a manometer whose scale is graduated in accordance with the function above for a specific fan. On request, detailed charts can be supplied. The accuracy of the readings is ±10 %. If the flow measurement device is recalibrated at the site (for instance in an air handling unit), an accuracy of ±5 % can be achieved.

Flow Measurement Device with manometer

GTLZ-53-1-ccc-1-0	**Flow measurement device with manometer for the GTLF**
GTLZ-54-1-ccc-1-0	**Flow measurement device with manometer for the GTLB**

GTLZ-53, 54 Flow measurement devices
The flow measurement device is supplied with a manometer as well. The supply includes flow measuring device, manometer with scale and mounting bracket for the measuring device and hoses. For a technical specification, see the GTLZ-50, 51 on the preceding page.

Accessories

Painted finish

GTLZ-60-1-ccc-d-0 **Painted finish, inner and outer surfaces**

d = 1 Epoxy powder coated and baked. 60 µm, colour: AM 8043, dark grey, M2

d = 2 Epoxy powder coated and baked. 100 µm, colour: AM 8043, dark grey, M3

d = 3 Wet-painted finish in three layers. 250 µm, colour: SSG28, light grey

d =1 60 µm thick painted finish
The fan casing, impeller and bearing bracket as well as accessories are coated with 60 mm thick epoxy powder and baked. The colour is AM 8043, dark grey. All bolts and nuts must be made of stainless steel.

Painting process:
– Alkali degreasing
– Iron phosphate pre-treatment
– Flushing with +40 °C water
– Drying at 150 °C
– Powder painting, 60 µm coat in one layer
– Drying at 215 °C

Epoxy powder is well suited for coating objects that are subject to mechanical and chemical stress. It is an excellent rust-inhibitor and can withstand acids, alkaline solutions, greases and solvents.

d =2 100 µm thick painted finish; meets the provisions for Environmental Class M3. The fan casing, impeller and bearing bracket as well as accessories are coated with 100 µm thick epoxy powder and baked. The colour is AM 8043, dark grey. All bolts and nuts must be made of stainless steel. The coating process and epoxy powder are the same as in version d = 1; the coat is 100 µm thick in one layer.

d = 3 250 µm wet painted finish in three coats.
The fan casing and bearing bracket as well as accessories are painted with 250 µm thick epoxy in 3 layers. The colour is SSG28, light grey. The impeller is coated with 100 µm thick epoxy powder and baked. The colour is AM 8043, dark grey. All bolts and nuts must be made of stainless steel.

Motor cover

GTLZ-77-1-ccc-d-0 Motor cover, made of galvanised steel.

d = motor sizw (IEC)

1 = 071–100
2 = 112–132
3 = 160–180

Ordering Codes

Centrifugal fan **GTLB-a-bbb-c-dd-00**
GTLF -a-bbb-c-dd-00

LB = centrifugal fan with backward - curved blades (Sizes 022–071)
LF = centrifugal fan with forward - curved blades (Sizes 020–050)

Fan type **(a)**
1 = single-inlet fan for direct drive

Size **(bbb)**
020, 022, 025, 028, 031,035, 040, 045, 050, 056, 063, 071

Version **(c)**
1 = normal version
6 = smoke extraction version
8 = spark-proof version

Version and direction of discharge **(dd)**
First d: 1 = right-hand version
2 = left-hand version

Second d: 1 = 0°
3 = 90°
7 = 270°

Single speed motor 2, 4, 6, 8-pole **APAL -a-bbbbb-c-d**

Two speed motor, 2/4, 4/8-pole Dahlander-wound, speed relation 1:2 **ARAL-a-bbbbb-c-d**

Two speed motor, 4/6-pole two separate windings, speed relation 1:1.5 **ATAL -a-bbbbb-c-d**

Number of poles **(a)**
2, 4, 6, 8

Rated output **(bbbbb)**
The three first digits in "b" code indicate whole kilowatts, the two last digits indicate decimals for example 00300 = 3 kW

Note: Due to generation change of motors the first digit "b" is 9 instead of 0 in motor sizes IEC 071–100.

Voltage **(c)**
Single speed motor
1 = 220-240 VD/ 380-420VY
2 = 380-420 VD/ 660-690 VY

Two speed motor
2 = 380-400 V

Temperature sensor in the stator winding **(d)**
0 = without
1 = with bemetal temperature contacts
2 = with thermistor

Accessoris **GTLZ-aa-b-ccc-d-e**

(aa) Type of accessory

(b) 1 = Accessory for the GT…-1

(ccc) Fan size

(d) 1 = to be supplied with fan (specify d = 0 if you are placing an order for individual accessories only). See the ordering code as well.

(e) Generation digit.

Flexible connection, inlet **GTLZ-11-1-ccc-1-0**
Normal version, max. +80 °C

Fan size **(ccc)**

Flexible connection, inlet **GTLZ-12-1-ccc-1-0**
Smoke extraction version, max. +400 °C

Fan size **(ccc)**

Protective screen, inlet **GTLZ-13-1-ccc-1-0**

Fan size **(ccc)**

Flexible connection, outlet **GTLZ-21-1-ccc-1-0**
Normal version, max. +80 °C

Fan size **(ccc)**

Flexible connection, outlet **GTLZ-22-1-ccc-1-0**
Smoke extraction version, max. +400 °C

Fan size **(ccc)**

Protective screen, outlet **GTLZ-23-1-ccc-1-0**

Fan size **(ccc)**

Ordering Codes

Accessories
Counterflange, outlet **GTLZ-24-1-ccc-1-0**

Fan size **(ccc)**

Inspection cover **GTLZ-32-1-ccc-d-0**

Fan size **(ccc)**

Location, see illustration **(d)**
d = 0
1
2
3
4

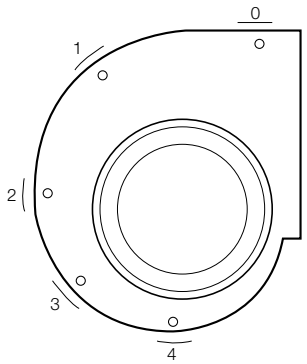

Drain **GTLZ-34-1-ccc-d-0**

Fan size **(ccc)**

Location, see illustration **(d)**
d = 0
1
2
3
4

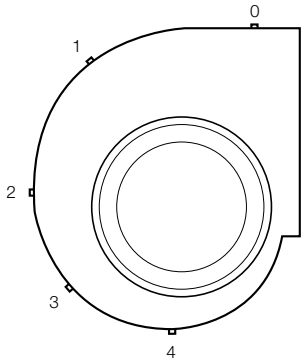

Accessories
Anti-vibration mountings **GTLZ-42-1-ccc-d-0**

Fan size **(ccc)**

Version **(d)**
1 = for GTLB and GTLF

Flow measurement device for GTLF **GTLZ-50-1-ccc-1-0**

Fan size **(ccc)**

Flow measurement device for GTLB **GTLZ-51-1-ccc-1-0**

Fan size **(ccc)**

Flow measurement device with manometer GTLF **GTLZ-53-1-ccc-1-0**

Fan size **(ccc)**

Flow measurement device with manometer GTLB **GTLZ-54-1-ccc-1-0**

Fan size **(ccc)**

Painted finish, inner and outer surfaces **GTLZ-60-1-ccc-d-0**

Fan size **(ccc)**

Version **(d)**
1 = painted finish, 60 µm
2 = painted finish, 100 µm
3 = wet-painted finish, 250 µm in three layers

Motor cover **GTLZ-77-1-ccc-d-0**

Fläkt Woods Oy, Kalevantie 39, FI-205 20 Turku, Finland

t +358-102 230 000 f +358-102 233 475
w www.flaktwoods.com

FIFLO 4469 GB 02.12 TELESKOP REKLAMBYRÅ 036-30 83 80

FläktWoods